# CUPLOARE

# Proprietati de baza ale cuploarelor directionale

## Circuite cu patru porti

$(S_{ij} = S_{ji})$ Reciproc

$S_{ii} = 0$ Adaptare simultana la toate portile

$$[S] = \begin{bmatrix} 0 & S_{12} & S_{13} & S_{14} \\ S_{12} & 0 & S_{23} & S_{24} \\ S_{13} & S_{23} & 0 & S_{34} \\ S_{14} & S_{24} & S_{34} & 0 \end{bmatrix}$$

(11) $S_{14}^{*}\left(|S_{13}|^2 - |S_{24}|^2\right) = 0$

(13) $S_{23}\left(|S_{12}|^2 - |S_{34}|^2\right) = 0$

(14a) $|S_{12}|^2 + |S_{13}|^2 = 1$

(14b) $|S_{12}|^2 + |S_{24}|^2 = 1$

(14c) $|S_{13}|^2 + |S_{34}|^2 = 1$

(14d) $|S_{24}|^2 + |S_{34}|^2 = 1$

(15) $S_{12}^{*}S_{13} + S_{24}^{*}S_{34} = 0$

$$\sum_k S_{ik}S_{kj}^{*} = \delta_{ij}$$ Fara pierderi

**10 ecuatii**

# Cazul 1

(11) si (13) > $S_{14} = S_{23} = 0 \Rightarrow$ $[S] = \begin{bmatrix} 0 & S_{12} & S_{13} & 0 \\ S_{12} & 0 & 0 & S_{24} \\ S_{13} & 0 & 0 & S_{34} \\ 0 & S_{24} & S_{34} & 0 \end{bmatrix}$ $\Leftrightarrow$ **Cuplor directional**

(14a) si (14b) > $|S_{13}| = |S_{24}|$

(14b) si (14d) > $|S_{12}| = |S_{34}|$

Alegem: $S_{12} = S_{34} = \alpha$ $S_{13} = \beta e^{j\theta}$ $S_{24} = \beta e^{j\phi}$

(15) > $\theta + \phi = \pi \pm 2n\pi$

**Cuplor simetric** $\theta = \phi = \pi/2$

$$[S] = \begin{bmatrix} 0 & \alpha & j\beta & 0 \\ \alpha & 0 & 0 & j\beta \\ j\beta & 0 & 0 & \alpha \\ 0 & j\beta & \alpha & 0 \end{bmatrix}$$

**Cuplor antisimetric** $\theta = 0\,,\ \phi = \pi$

$$[S] = \begin{bmatrix} 0 & \alpha & \beta & 0 \\ \alpha & 0 & 0 & -\beta \\ \beta & 0 & 0 & \alpha \\ 0 & -\beta & \alpha & 0 \end{bmatrix}$$

(14a) > $\alpha^2 + \beta^2 = 1$

# Cazul 2

(11) si (13) > $\begin{cases} |S_{13}| = |S_{24}| \\ |S_{12}| = |S_{34}| \end{cases}$ Alegem: $S_{13} = S_{24} = \alpha \qquad S_{12} = S_{34} = j\beta$

(14a) > $\alpha^2 + \beta^2 = 1$

$$S_{13}^* S_{23} + S_{14}^* S_{24} = 0 \quad \Rightarrow \quad \alpha\left(S_{23} + S_{14}^*\right) = 0$$

$$S_{12}^* S_{23} + S_{14}^* S_{34} = 0 \quad \Rightarrow \quad \beta\left(S_{14}^* - S_{23}\right) = 0$$

$$\longrightarrow \quad S_{14} = S_{23} = 0$$

**Cuplor directional**

$$[S] = \begin{bmatrix} 0 & j\beta & \alpha & 0 \\ j\beta & 0 & 0 & \alpha \\ \alpha & 0 & 0 & j\beta \\ 0 & \alpha & j\beta & 0 \end{bmatrix}$$

$$\downarrow$$

$$\alpha = \beta = 0$$

**Caz banal**

# CONCLUZIE

**Orice circuit cu patru porti,**
**reciproc, fara pierderi si adaptat la toate portile**
**este un cuplor directional**

# Cuplor directional

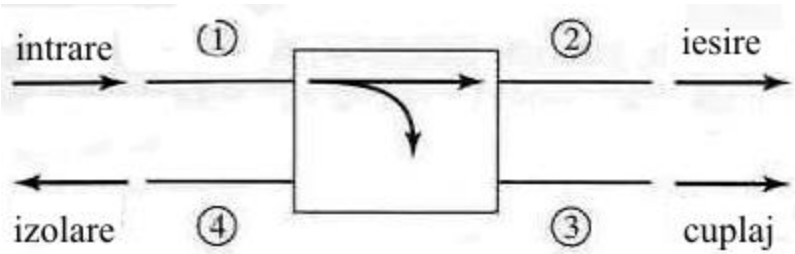


$$|S_{12}|^2 = \alpha^2 = 1 - \beta^2$$

$$|S_{13}|^2 = \beta^2$$

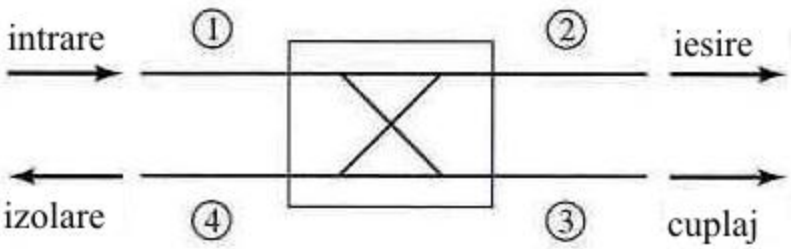


**Cuplaj** $= C = 10\log\frac{P_1}{P_3} = -20\log(\beta)\,dB$

**Directivitate** $= D = 10\log\frac{P_3}{P_4} = 20\log\left(\frac{\beta}{|S_{14}|}\right)dB$

**Izolare** $= I = 10\log\left(\frac{P_1}{P_4}\right) = -20\log|S_{14}|\,dB$

$$I = D + C\,,\ dB$$

# Cuplor hibrid

Cuplorul hibrid este cuplorul directional de 3 dB

$$\alpha = \beta = 1/\sqrt{2}$$

**Cuplor hibrid in cuadratura**

$$(\theta = \phi = \pi/2)$$

$$[S] = \frac{1}{\sqrt{2}} \begin{bmatrix} 0 & 1 & j & 0 \\ 1 & 0 & 0 & j \\ j & 0 & 0 & 1 \\ 0 & j & 1 & 0 \end{bmatrix}$$

**Cuplor hibrid in inel**

$$(\theta = 0\,, \phi = \pi)$$

$$[S] = \frac{1}{\sqrt{2}} \begin{bmatrix} 0 & 1 & 1 & 0 \\ 1 & 0 & 0 & -1 \\ 1 & 0 & 0 & 1 \\ 0 & -1 & 1 & 0 \end{bmatrix}$$

# Cuplorul hibrid în cuadratură (90°)

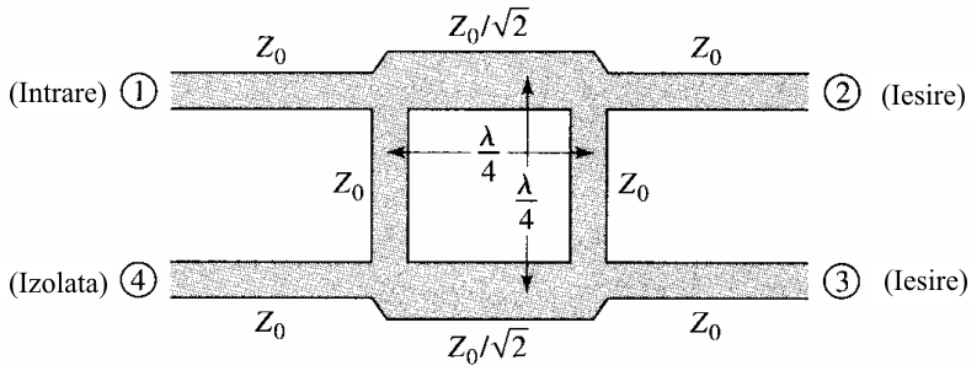


$$[S] = \frac{-1}{\sqrt{2}} \begin{bmatrix} 0 & j & 1 & 0 \\ j & 0 & 0 & 1 \\ 1 & 0 & 0 & j \\ 0 & 1 & j & 0 \end{bmatrix}$$

Simetria fizică se transformă în simetrie sau antisimetrie a câmpului electromagnetic

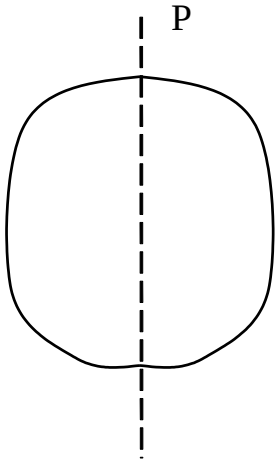


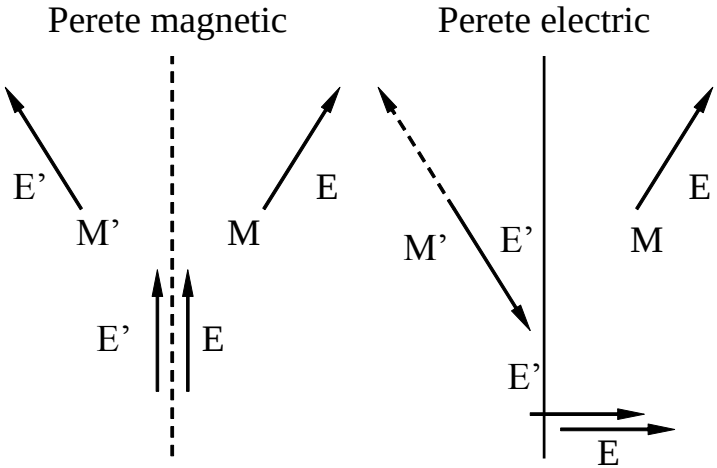


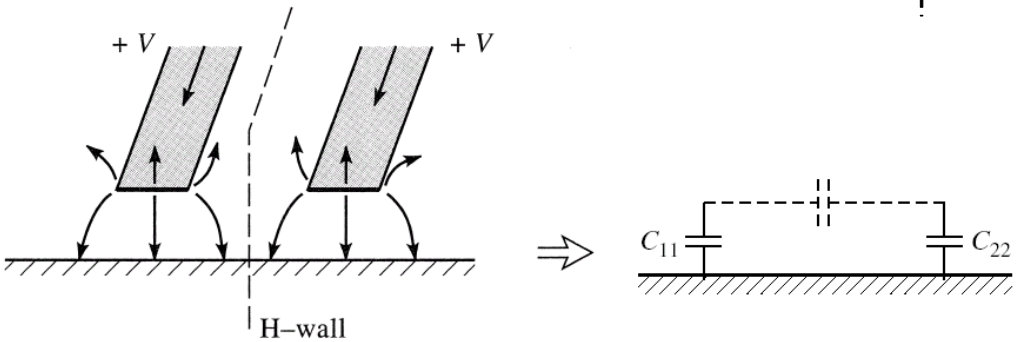


(a)

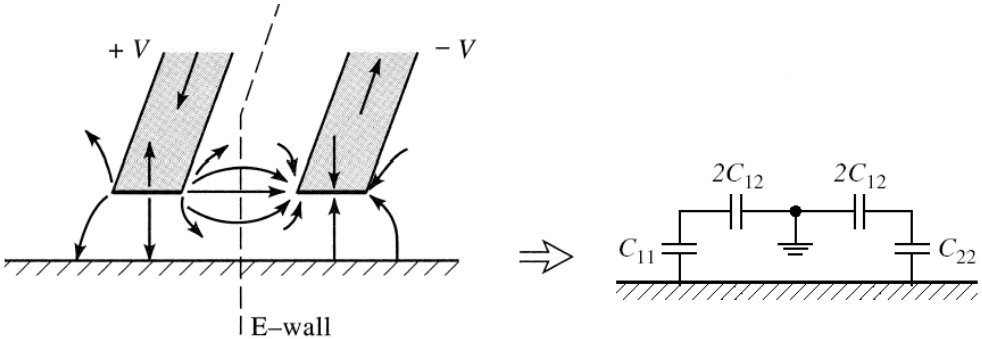


(b)

# Analiza pe modul par-impar

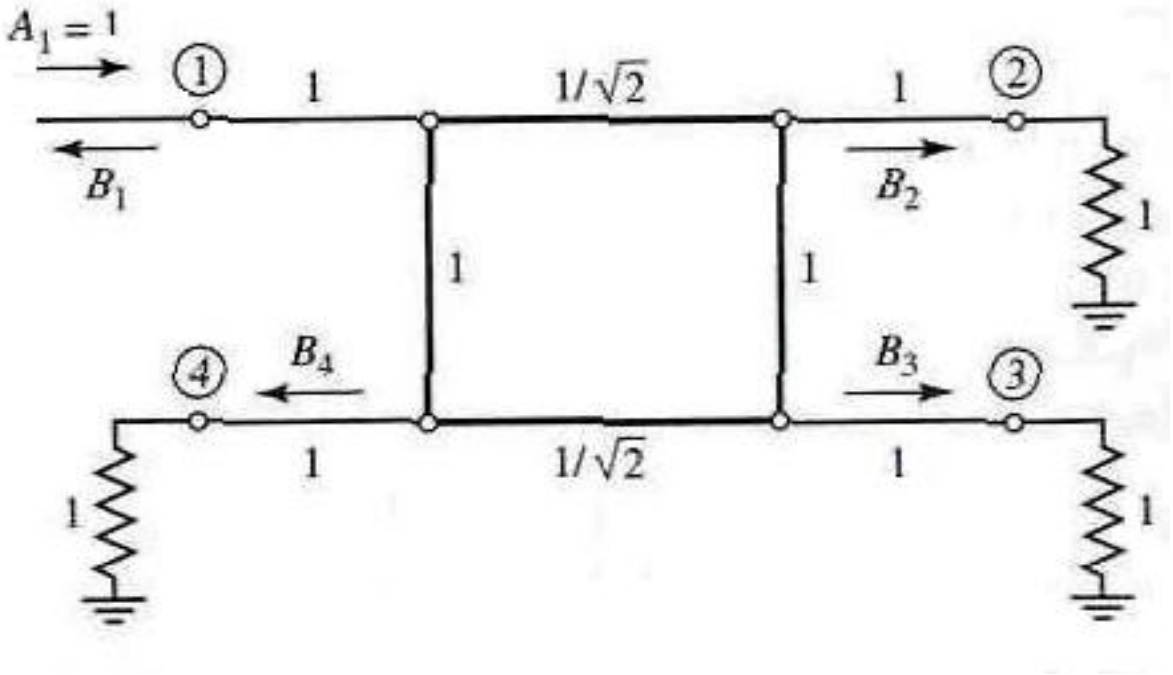

# Analiza pe modul par-impar

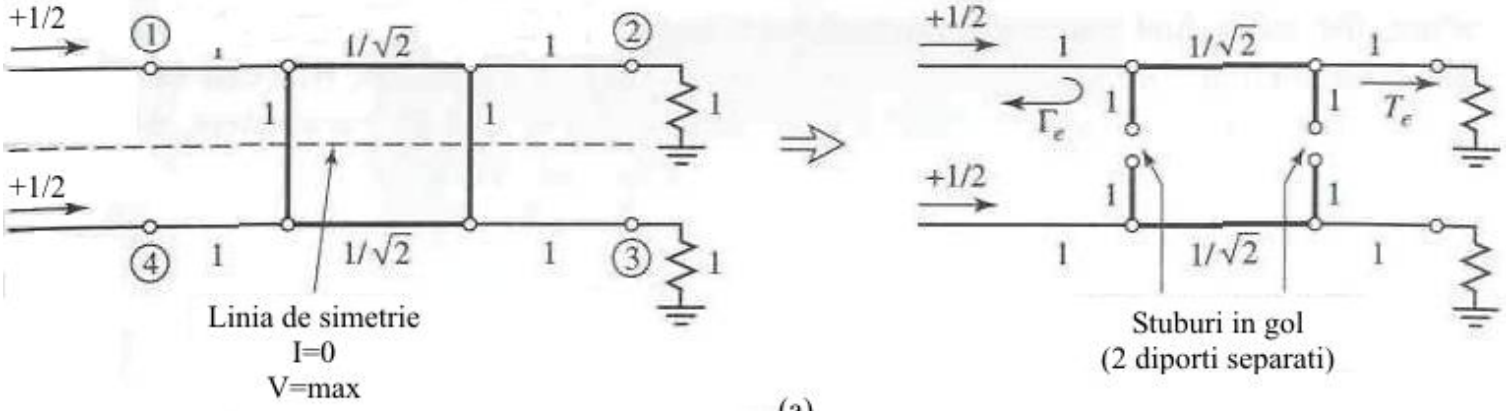


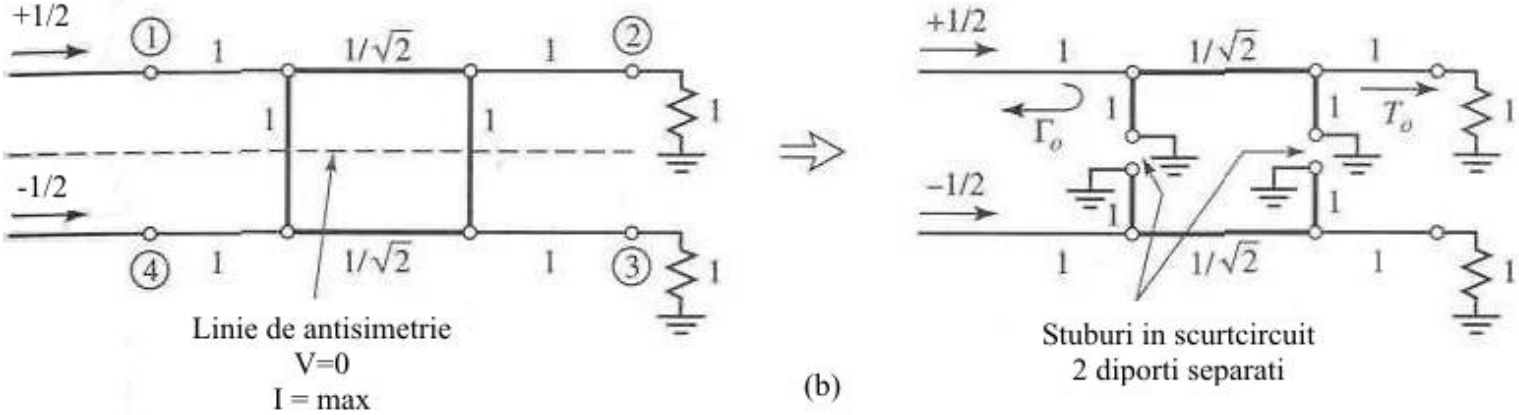


$$b_1 = \frac{1}{2}\Gamma_e + \frac{1}{2}\Gamma_o \qquad b_2 = \frac{1}{2}T_e + \frac{1}{2}T_o \qquad b_3 = \frac{1}{2}T_e - \frac{1}{2}T_o \qquad b_4 = \frac{1}{2}\Gamma_e - \frac{1}{2}\Gamma_o$$

| Circuit | *ABCD* Parameters | |
|---|---|---|
| 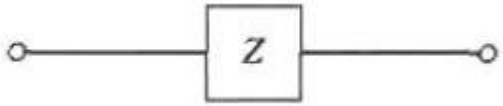  | $A = 1$<br>$C = 0$ | $B = Z$<br>$D = 1$ |
| | | |
| 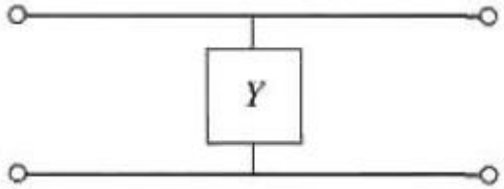  | $A = 1$<br>$C = Y$ | $B = 0$<br>$D = 1$ |
| | | |
| 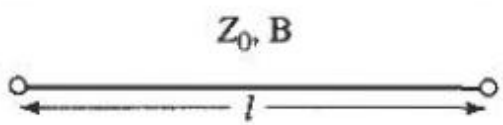  | $A = \cos\beta\ell$<br>$C = jY_0 \sin\beta\ell$ | $B = jZ_0 \sin\beta\ell$<br>$D = \cos\beta\ell$ |

Linie de transmisie cu impedanta de terminatie

$$Z_{in} = Z_0 \frac{(Z_L + Z_0)e^{j\beta\ell} + (Z_L - Z_0)e^{-j\beta\ell}}{(Z_L + Z_0)e^{j\beta\ell} - (Z_L - Z_0)e^{-j\beta\ell}}$$

$$= Z_0 \frac{Z_L \cos\beta\ell + jZ_0 \sin\beta\ell}{Z_0 \cos\beta\ell + jZ_L \sin\beta\ell}$$

$$= Z_0 \frac{Z_L + jZ_0 \tan\beta\ell}{Z_0 + jZ_L \tan\beta\ell}.$$

scurtcircuit

$$Z_{in} = jZ_0 \tan\beta\ell,$$

gol

$$Z_{in} = -jZ_0 \cot\beta\ell,$$

# Calculul cuploarelor cu două trepte

$$Y'_S = \begin{cases} Y_1 & \text{pentru modul par} \\ -Y_1 & \text{pentru modul impar} \end{cases}$$

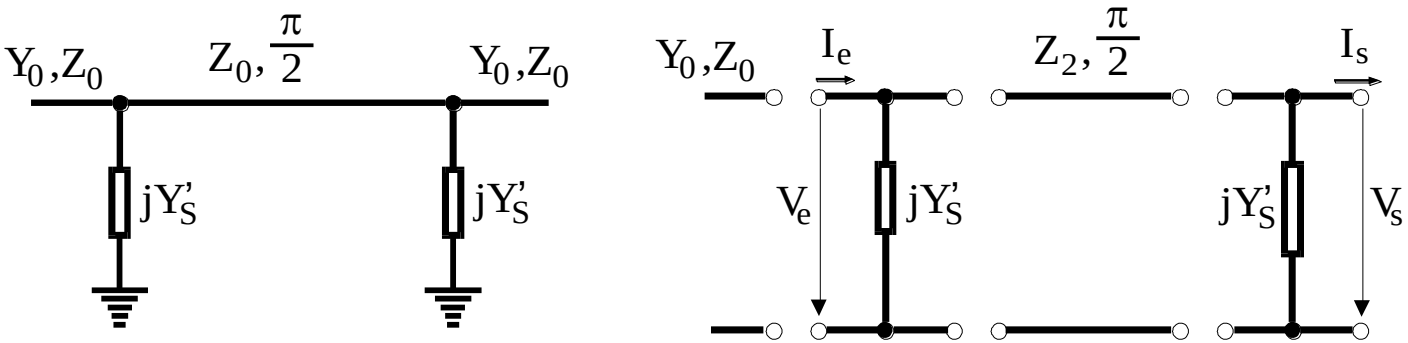


a) b)

$$\begin{bmatrix} V_e \\ I_e \end{bmatrix} = \begin{bmatrix} 1 & 0 \\ jY'_S & 1 \end{bmatrix} \cdot \begin{bmatrix} 0 & jZ_2 \\ jY_2 & 0 \end{bmatrix} \cdot \begin{bmatrix} 1 & 0 \\ jY'_S & 1 \end{bmatrix} \cdot \begin{bmatrix} V_S \\ I_S \end{bmatrix}$$

$$\begin{bmatrix} V_e \\ I_e \end{bmatrix} = \begin{bmatrix} -Y'_S Z_2 & jZ_2 \\ -jY'^2_S Z_2 + jY_2 & -Y'_S Z_2 \end{bmatrix} \cdot \begin{bmatrix} V_S \\ I_S \end{bmatrix}$$

$$S_{11} = \frac{j\frac{Z_2}{Z_0} - Z_0\left(-jY'^2_S Z_2 + jY_2\right)}{-2Y'_S Z_2 + j\frac{Z_2}{Z_0} + Z_0\left(-jY'^2_S + jY_2\right)}$$

$$S_{12} = \frac{2\left[\left(-Y'_S Z_2\right)^2 - jZ_2\left(-jY'^2_S Z_2 + jY_2\right)\right]}{-2Y'_S Z_2 + j\frac{Z_2}{Z_0} + Z_0\left(-jY'^2_S Z_2 + jY_2\right)}$$

$$\Gamma = S_{11} = \frac{j\left(z_2 - y_2 + y'^2_S z_2\right)}{-2y'_S z_2 + j\left(z_2 + y_2 - y'^2_S z_2\right)} = S_{22}$$

$$S_{21} = \frac{2}{-2Y'_S Z_2 + j\frac{Z_2}{Z_0} + Z_0\left(-jY'^2_S Z_2 + jY_2\right)}$$

$$S_{22} = \frac{j\frac{Z_2}{Z_0} - Z_0\left(-jY'^2_S Z_2 + jY_2\right)}{-2Y'_S Z_2 + j\frac{Z_2}{Z_0} + Z_0\left(-jY'^2_S Z_2 + jY_2\right)}$$

$$T = S_{21} = \frac{2}{-2y'_S z_2 + j\left(z_2 + y_2 - y'^2_S z_2\right)} = S_{12}$$

# Legatura dintre parametrii S si parametrii ABCD

$$A = \sqrt{\frac{Z_{01}}{Z_{02}}}\,\frac{\left(1 + S_{11} - S_{22} - \Delta S\right)}{2S_{21}}$$

$$B = \sqrt{Z_{01}Z_{02}}\,\frac{\left(1 + S_{11} + S_{22} + \Delta S\right)}{2S_{21}}$$

$$C = \frac{1}{\sqrt{Z_{01}Z_{02}}}\,\frac{1 - S_{11} - S_{22} + \Delta S}{2S_{21}}$$

$$D = \sqrt{\frac{Z_{02}}{Z_{01}}}\,\frac{1 - S_{11} + S_{22} - \Delta S}{2S_{21}}$$

$$\Delta S = S_{11}S_{22} - S_{12}S_{21}$$

$$S_{11} = \frac{AZ_{02} + B - CZ_{01}Z_{02} - DZ_{01}}{AZ_{02} + B + CZ_{01}Z_{02} + DZ_{01}}$$

$$S_{12} = \frac{2(AD - BC)\sqrt{Z_{01}Z_{02}}}{AZ_{02} + B + CZ_{01}Z_{02} + DZ_{01}}$$

$$S_{21} = \frac{2\sqrt{Z_{01}Z_{02}}}{AZ_{02} + B + CZ_{01}Z_{02} + DZ_{01}}$$

$$S_{22} = \frac{-AZ_{02} + B - CZ_{01}Z_{02} + DZ_{01}}{AZ_{02} + B + CZ_{01}Z_{02} + DZ_{01}}$$

# Adaptarea cuplorului si coeficientul de cuplaj

$$\Gamma_e = \frac{j\cdot\left(z_2 - y_2 + y_1^2 z_2\right)}{-2y_1z_2 + j\left(z_2 + y_2 - y_1^2 z_2\right)}$$

$$\Gamma_o = \frac{j\cdot\left(z_2 - y_2 + y_1^2 z_2\right)}{2y_1z_2 + j\left(z_2 + y_2 - y_1^2 z_2\right)}$$

$$T_e = \frac{2}{-2y_1z_2 + j\cdot\left(z_2 + y_2 - y_1^2 z_2\right)}$$

$$T_o = \frac{2}{2y_1z_2 + j\cdot\left(z_2 + y_2 - y_1^2 z_2\right)}$$

$$b_1 = \frac{\Gamma_e + \Gamma_o}{2} = \frac{z_2^2 - \left(y_2 - y_1^2 z_2\right)^2}{(2y_1z_2)^2 + \left(z_2 + y_2 - y_1^2 z_2\right)^2}$$

$$b_2 = \frac{T_e + T_o}{2} = \frac{-2j\left(z_2 + y_2 - y_1^2 z_2\right)}{(2y_1z_2)^2 + \left(z_2 + y_2 - y_1^2 z_2\right)^2}$$

$$b_3 = \frac{T_e - T_o}{2} = \frac{-4y_1z_2}{(2y_1z_2)^2 + \left(z_2 + y_2 - y_1^2 z_2\right)^2}$$

$$b_4 = \frac{\Gamma_e - \Gamma_o}{2} = \frac{-2jy_1z_2\left(z_2 - y_2 + y_1^2 z_2\right)}{(2y_1z_2)^2 + \left(z_2 + y_2 - y_1^2 z_2\right)^2}$$

$$b_1 = 0 \Rightarrow z_2 - y_2 + y_1^2 z_2 = 0 \Rightarrow z_2^2 = \frac{1}{1 + y_1^2}$$

$$\boxed{y_2^2 = 1 + y_1^2}$$

$$\boxed{C = 10\log\frac{P_1}{P_3} = -20\log|b_3|\ , dB}$$

$$b_1 = 0\ b_4 = 0\ b_3 = -y_1z_2\ \ b_2 = -jz_2$$

$$b_3 = -\frac{\sqrt{y_2^2 - 1}}{y_2}\ ,\ b_2 = -\frac{j}{y_2}$$

$$\boxed{C = \frac{\sqrt{y_2^2 - 1}}{y_2}}$$

$$b_3 = -C$$

$$b_2 = -j\sqrt{1 - C^2}$$

$$[S] = \begin{bmatrix} 0 & -j\sqrt{1-C^2} & -C & 0 \\ -j\sqrt{1-C^2} & 0 & 0 & -C \\ -C & 0 & 0 & -j\sqrt{1-C^2} \\ 0 & -C & -j\sqrt{1-C^2} & 0 \end{bmatrix}$$

# Exemplu

Proiectaţi un cuplor în scară pe impedanţa caracteristică de 50 Ω, şi reprezentati mărimea parametrilor S între

$0.5 f_0$ şi $1.5 f_0$ , unde $f_0$

este frecvenţa de proiectare la care liniile cuplorului sunt de lungime $\lambda/4$

.

# Solutie

Un cuplor în scară cu C = 3dB, are $C = 1/\sqrt{2}$

. Atunci $y_2 = \sqrt{2}$ şi $y_1 = 1$

. Astfel matricea S din relaţia (&.47) devine cea din relaţia (&.38). În plus, pentru $Z_0 = 50\Omega$

, impedanţele caracteristice ale liniilor cuplorului vor fi:

$$Z_1 = Z_0 = 50\Omega \qquad Z_2 = \frac{Z_0}{\sqrt{2}} = 35.4\Omega$$

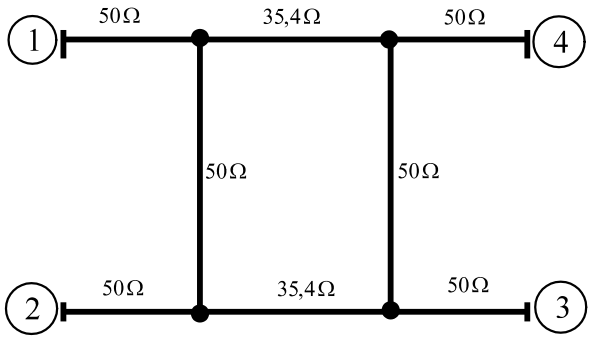


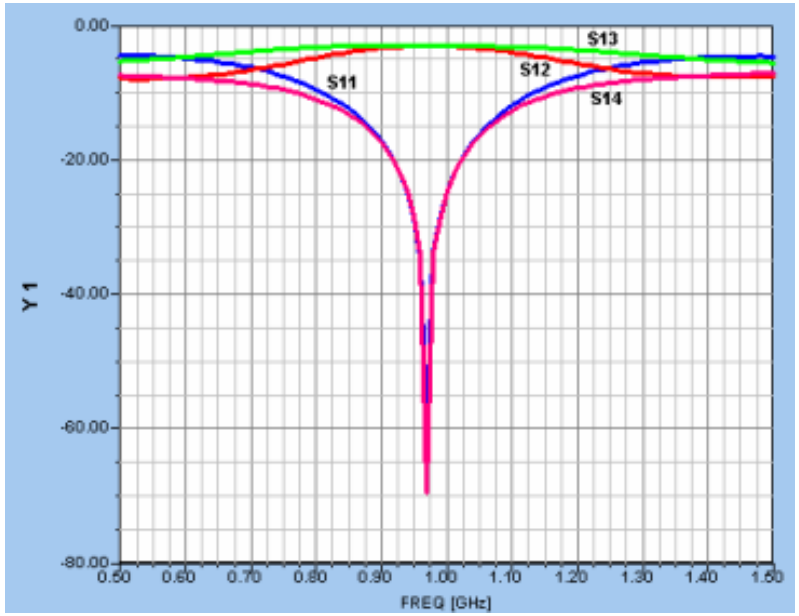

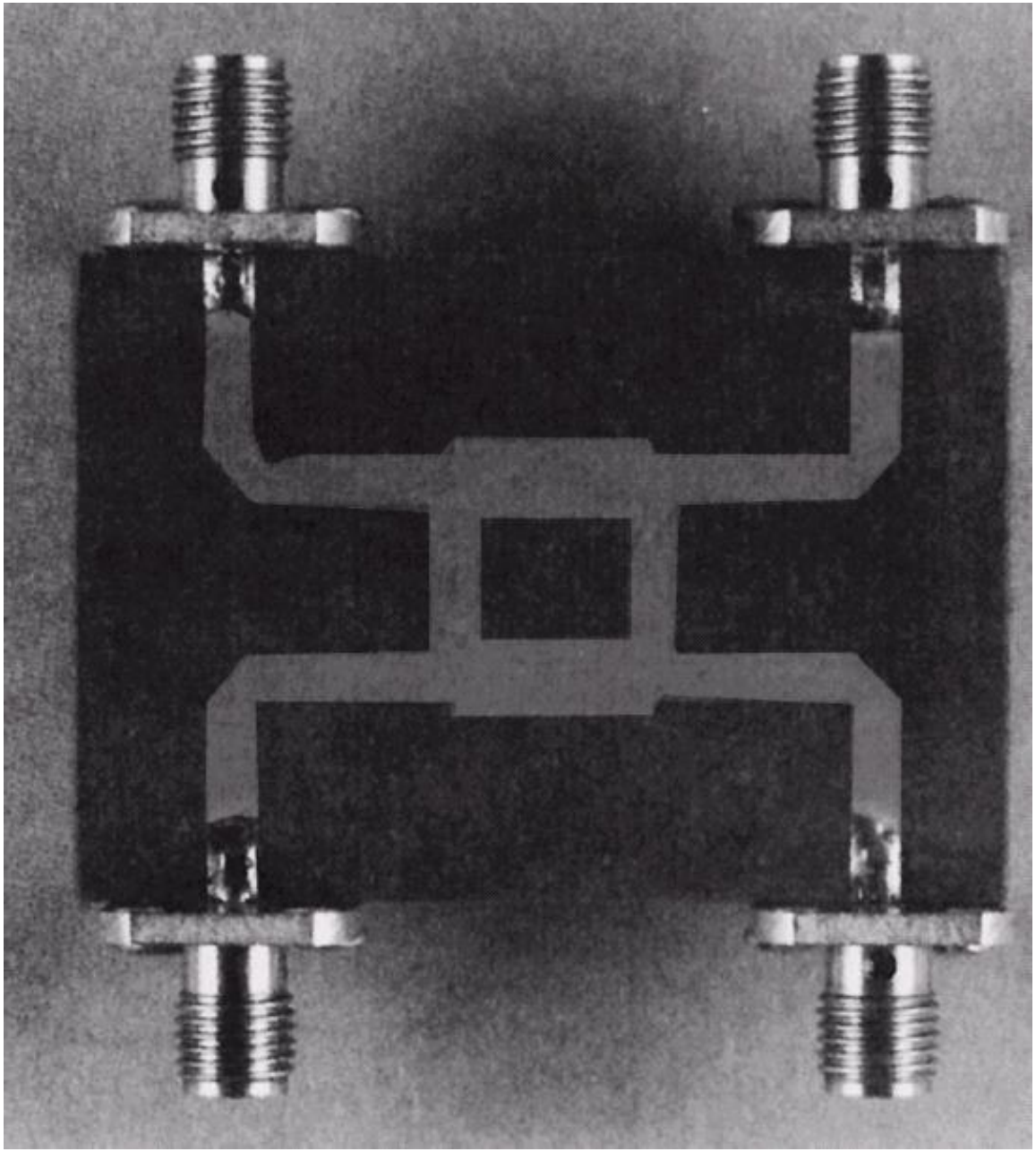

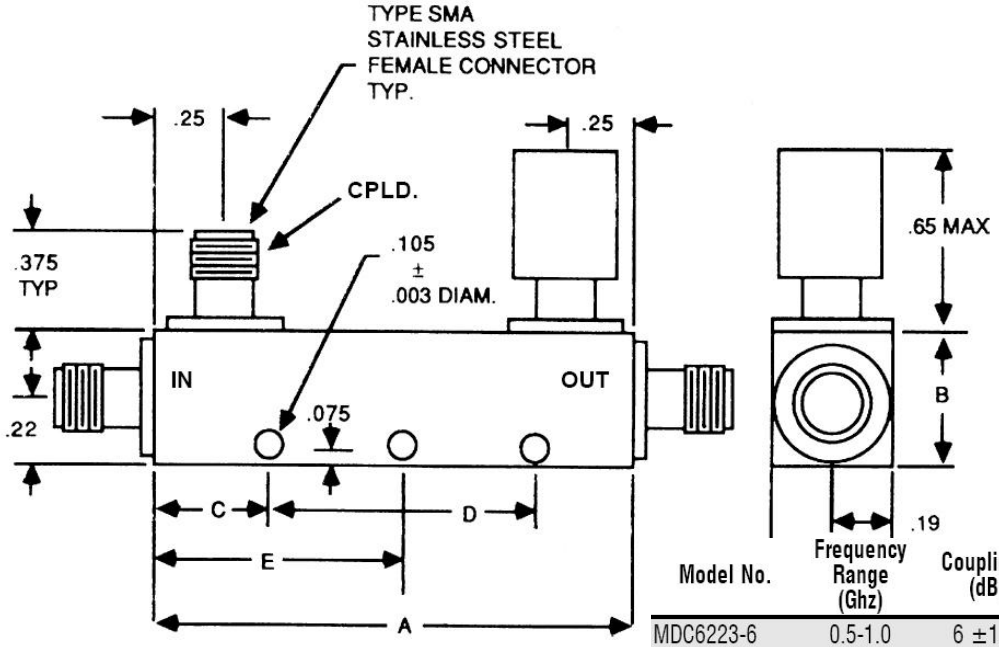


| Model No. | Frequency Range (Ghz) | Coupling † (dB) | Freq. Sens. (dB) | Insertion Loss (dB) | | Directivity (dB min.) | VSWR max. | |
|---|---|---|---|---|---|---|---|---|
| | | | | Excl. Cpld Pwr | True | | Primary Line | Secondary Line |
| MDC6223-6 | 0.5-1.0 | 6 ±1.00 | ±0.60 | 0.20 | 1.80 | 25 | 1.15 | 1.15 |
| MDC6223-10 | 0.5-1.0 | 10 ±1.25 | ±0.75 | 0.20 | 0.80 | 25 | 1.10 | 1.10 |
| MDC6223-20 | 0.5-1.0 | 20 ±1.25 | ±0.75 | 0.15 | 0.20 | 25 | 1.10 | 1.10 |
| MDC6223-30 | 0.5-1.0 | 30 ±1.25 | ±0.75 | 0.15 | 0.20 | 25 | 1.10 | 1.10 |
| MDC6224-6 | 1.0-2.0 | 6 ±1.00 | ±0.60 | 0.20 | 1.80 | 25 | 1.15 | 1.15 |
| MDC6224-10 | 1.0-2.0 | 10 ±1.25 | ±0.75 | 0.20 | 0.80 | 25 | 1.10 | 1.10 |
| MDC6224-20 | 1.0-2.0 | 20 ±1.25 | ±0.75 | 0.15 | 0.20 | 25 | 1.10 | 1.10 |
| MDC6224-30 | 1.0-2.0 | 30 ±1.25 | ±0.75 | 0.15 | 0.20 | 25 | 1.10 | 1.10 |
| MDC6225-6 | 2.0-4.0 | 6 ±1.00 | ±0.60 | 0.20 | 1.80 | 22 | 1.15 | 1.15 |
| MDC6225-10 | 2.0-4.0 | 10 ±1.25 | ±0.75 | 0.20 | 0.80 | 22 | 1.15 | 1.15 |
| MDC6225-20 | 2.0-4.0 | 20 ±1.25 | ±0.75 | 0.15 | 0.20 | 22 | 1.15 | 1.15 |
| MDC6225-30 | 2.0-4.0 | 30 ±1.25 | ±0.75 | 0.15 | 0.20 | 22 | 1.15 | 1.15 |
| MDC6266-6 | 2.6-5.2 | 6 ±1.00 | ±0.60 | 0.20 | 1.80 | 20 | 1.25 | 1.25 |
| MDC6266-10 | 2.6-5.2 | 10 ±1.25 | ±0.75 | 0.20 | 0.80 | 20 | 1.25 | 1.25 |
| MDC6266-20 | 2.6-5.2 | 20 ±1.25 | ±0.75 | 0.20 | 0.25 | 20 | 1.25 | 1.25 |
| MDC6266-30 | 2.6-5.2 | 30 ±1.25 | ±0.75 | 0.20 | 0.20 | 20 | 1.25 | 1.25 |
| MDC6226-6 | 4.0-8.0 | 6 ±1.00 | ±0.60 | 0.25 | 1.90 | 20 | 1.25 | 1.25 |
| MDC6226-10 | 4.0-8.0 | 10 ±1.25 | ±0.75 | 0.25 | 0.90 | 20 | 1.25 | 1.25 |
| MDC6226-20 | 4.0-8.0 | 20 ±1.25 | ±0.75 | 0.25 | 0.30 | 20 | 1.25 | 1.25 |
| MDC6226-30 | 4.0-8.0 | 30 ±1.25 | ±0.75 | 0.25 | 0.25 | 20 | 1.25 | 1.25 |
| MDC6227-6 | 7.0-12.4 | 6 ±1.00 | ±0.50 | 0.30 | 2.00 | 17 | 1.30 | 1.30 |
| MDC6227-10 | 7.0-12.4 | 10 ±1.00 | ±0.50 | 0.30 | 1.00 | 17 | 1.30 | 1.30 |
| MDC6227-20 | 7.0-12.4 | 20 ±1.00 | ±0.50 | 0.30 | 0.35 | 17 | 1.30 | 1.30 |

# Cuplorul prin proximitate

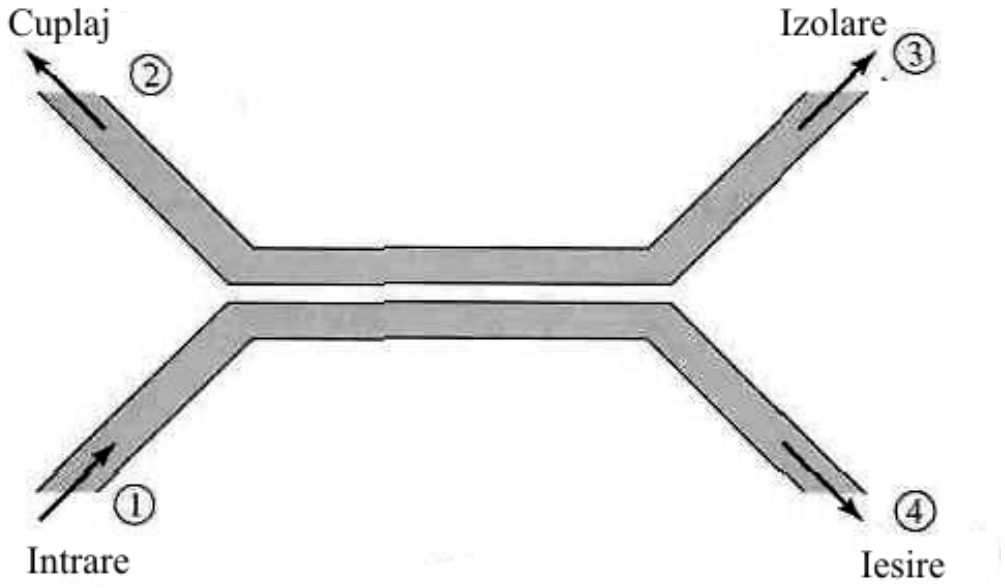


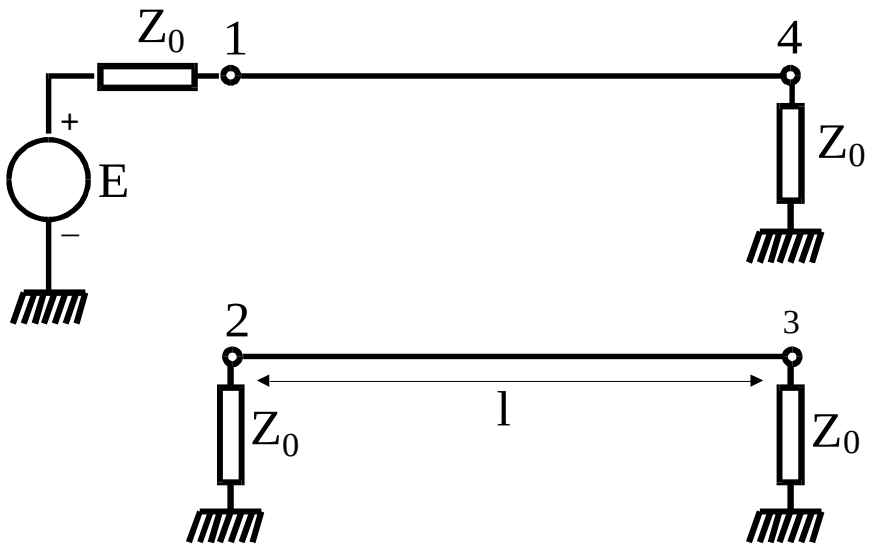

# Adaptarea cuplorului prin proximitate

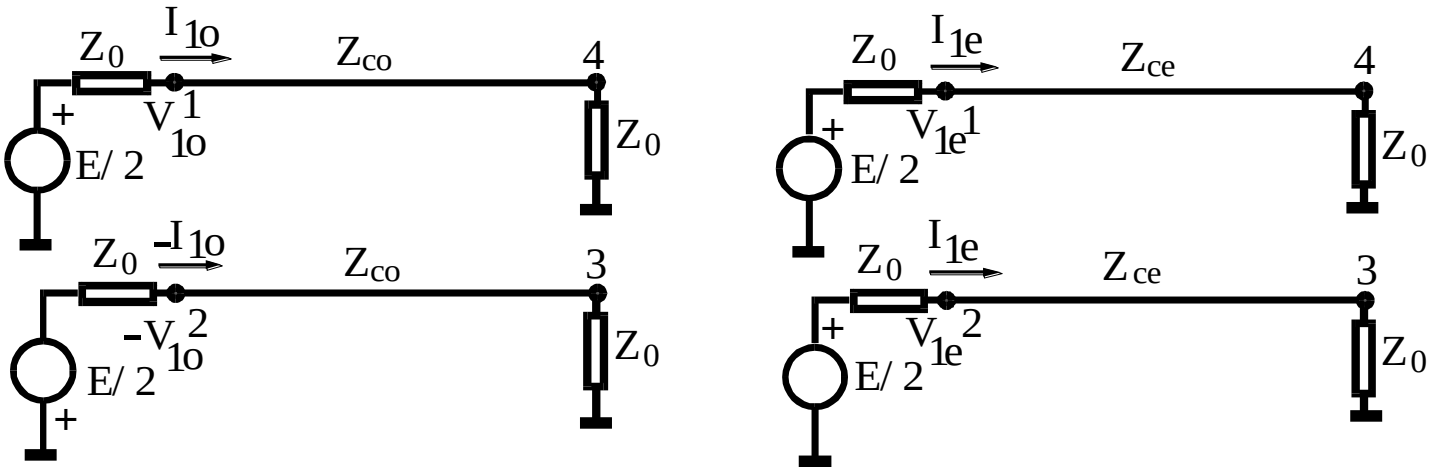


$$\begin{cases} Z_{ce} Z_{co} = Z_0^2 \\ \theta_e = \theta_o \end{cases}$$

# Directivitatea şi coeficientul de cuplaj ale cuplorului prin proximitate

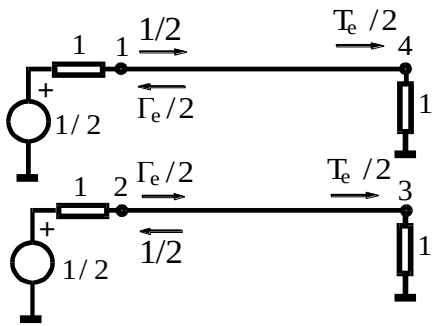


modul par

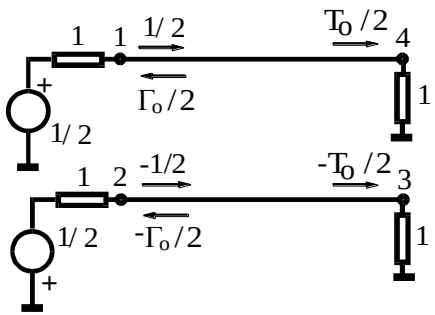


modul impar

$$a_1 = a_{1e} + a_{1o} = 1\,,\; a_2 = a_3 = a_4 = 0$$

$$b_1 = \frac{1}{2}\left(\Gamma_e + \Gamma_o\right) = 0 \Leftrightarrow$$

$$b_2 = \frac{1}{2}\left(\Gamma_e - \Gamma_o\right) = \frac{jC\sin(\theta)}{\cos(\theta)\sqrt{1-C^2} + j\sin(\theta)}$$

$$\boxed{\theta = \pi/2}$$

$$b_3 = \frac{1}{2}\left(T_e - T_o\right) = 0$$

$$b_4 = \frac{1}{2}\left(T_e + T_o\right) = \frac{\sqrt{1-C^2}}{\cos(\theta)\sqrt{1-C^2} + j\sin(\theta)}$$

$$\boxed{C = \frac{Z_{ce} - Z_{co}}{Z_{ce} + Z_{co}}}$$

$$\boxed{[S] = \begin{bmatrix} 0 & C & 0 & -j\sqrt{1-C^2} \\ C & 0 & -j\sqrt{1-C^2} & 0 \\ 0 & -j\sqrt{1-C^2} & 0 & C \\ -j\sqrt{1-C^2} & 0 & C & 0 \end{bmatrix}}$$

# Cuplor prin proximitate

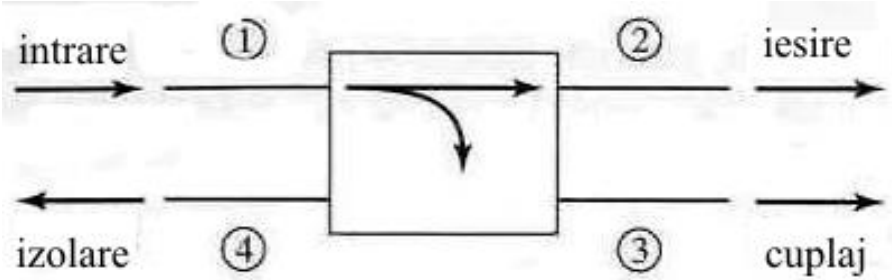


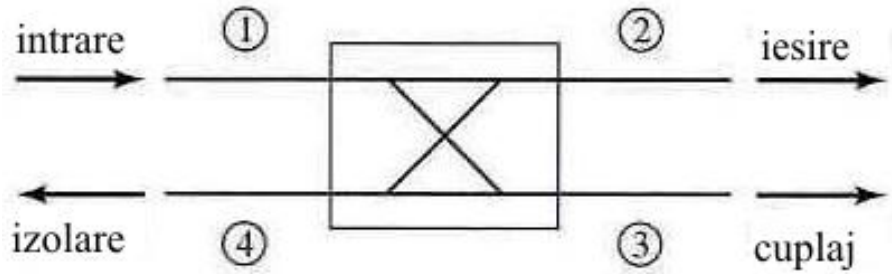


$$[S] = -j \cdot \begin{bmatrix} 0 & \sqrt{1-C^2} & jC & 0 \\ \sqrt{1-C^2} & 0 & 0 & jC \\ jC & 0 & 0 & \sqrt{1-C^2} \\ 0 & jC & \sqrt{1-C^2} & 0 \end{bmatrix}$$

$$[\mathrm{S}] = \frac{1}{\sqrt{2}} \begin{bmatrix} 0 & 1 & \mathrm{j} & 0 \\ 1 & 0 & 0 & \mathrm{j} \\ \mathrm{j} & 0 & 0 & 1 \\ 0 & \mathrm{j} & 1 & 0 \end{bmatrix}$$

Normalized even- and odd-mode characteristic impedance design data for edge-coupled striplines.

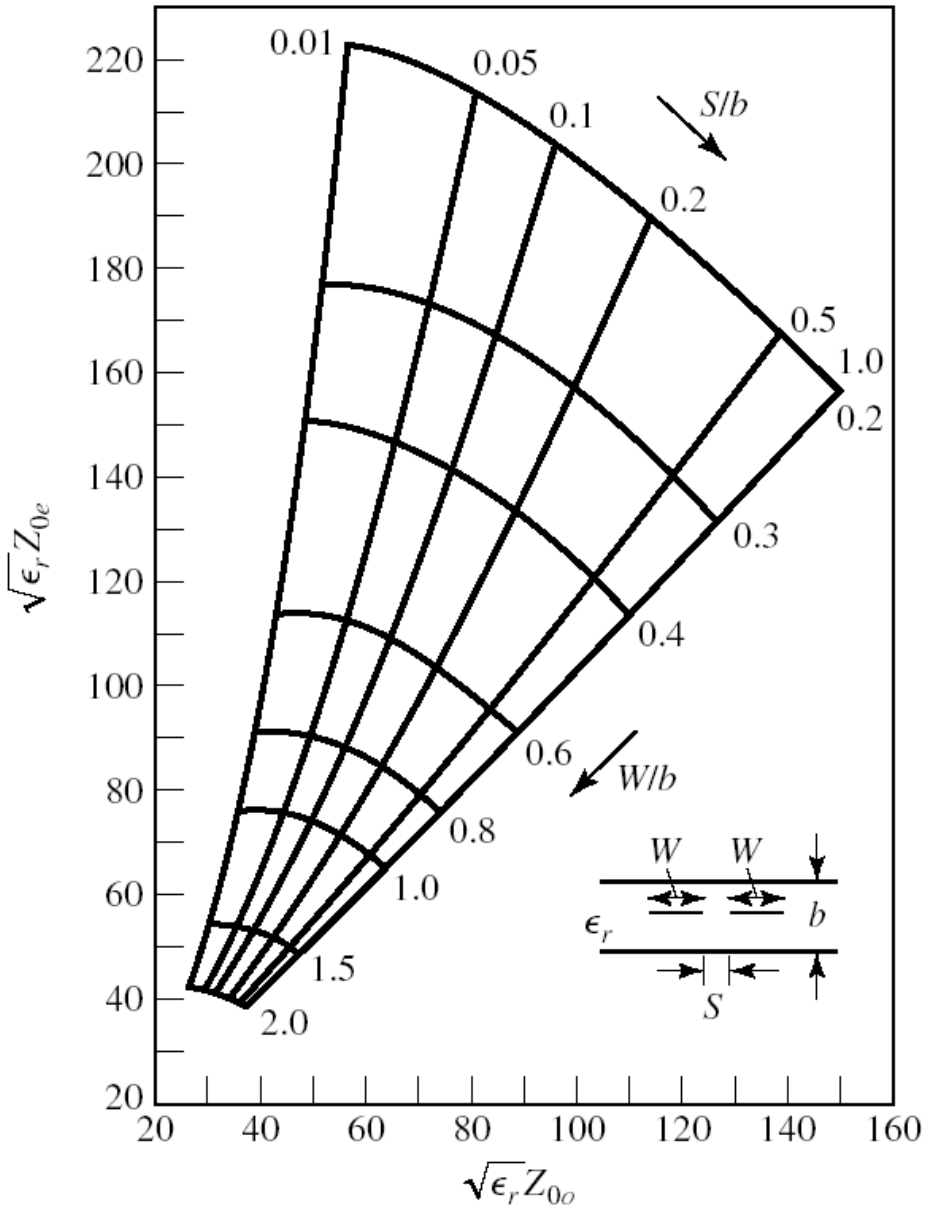

Even- and odd-mode characteristic impedance design data for coupled microstrip lines on a substrate with $\varepsilon_r = 10$.

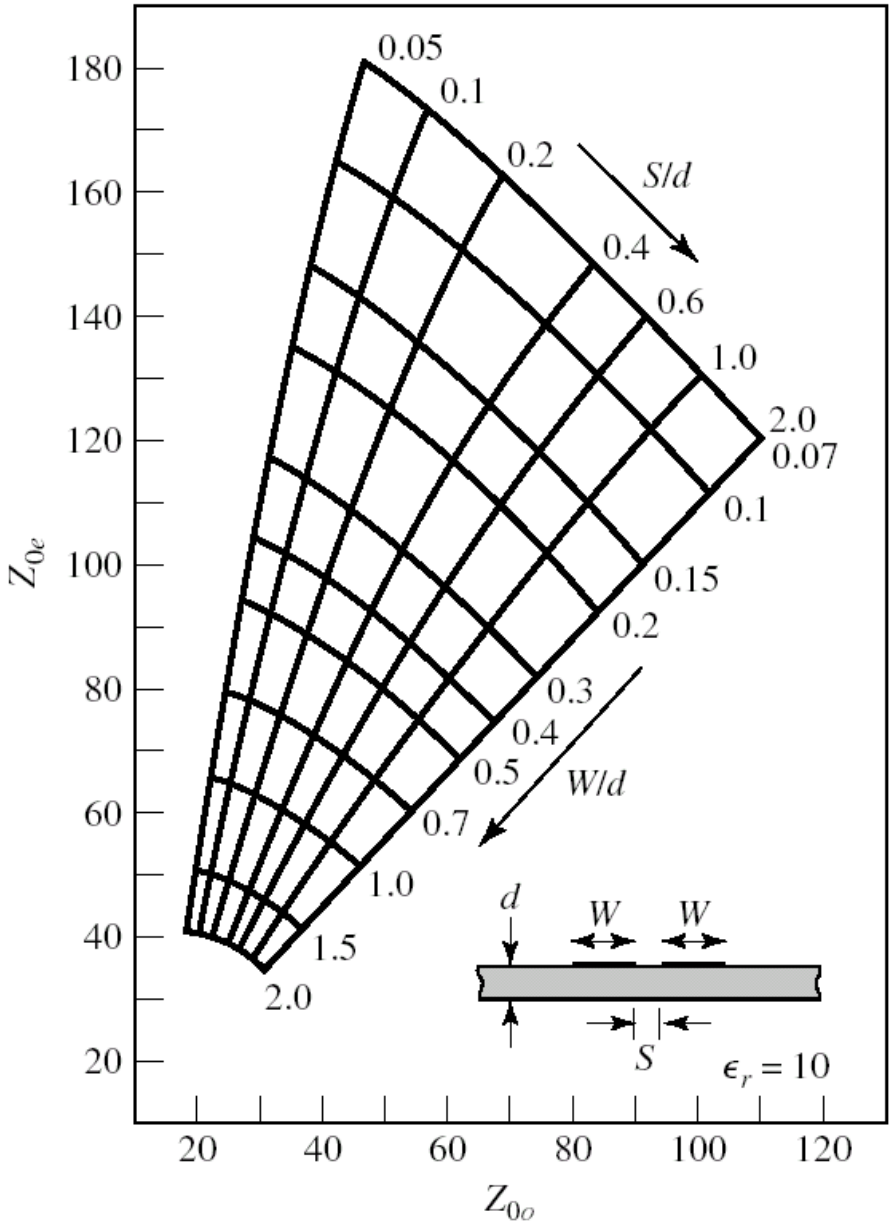

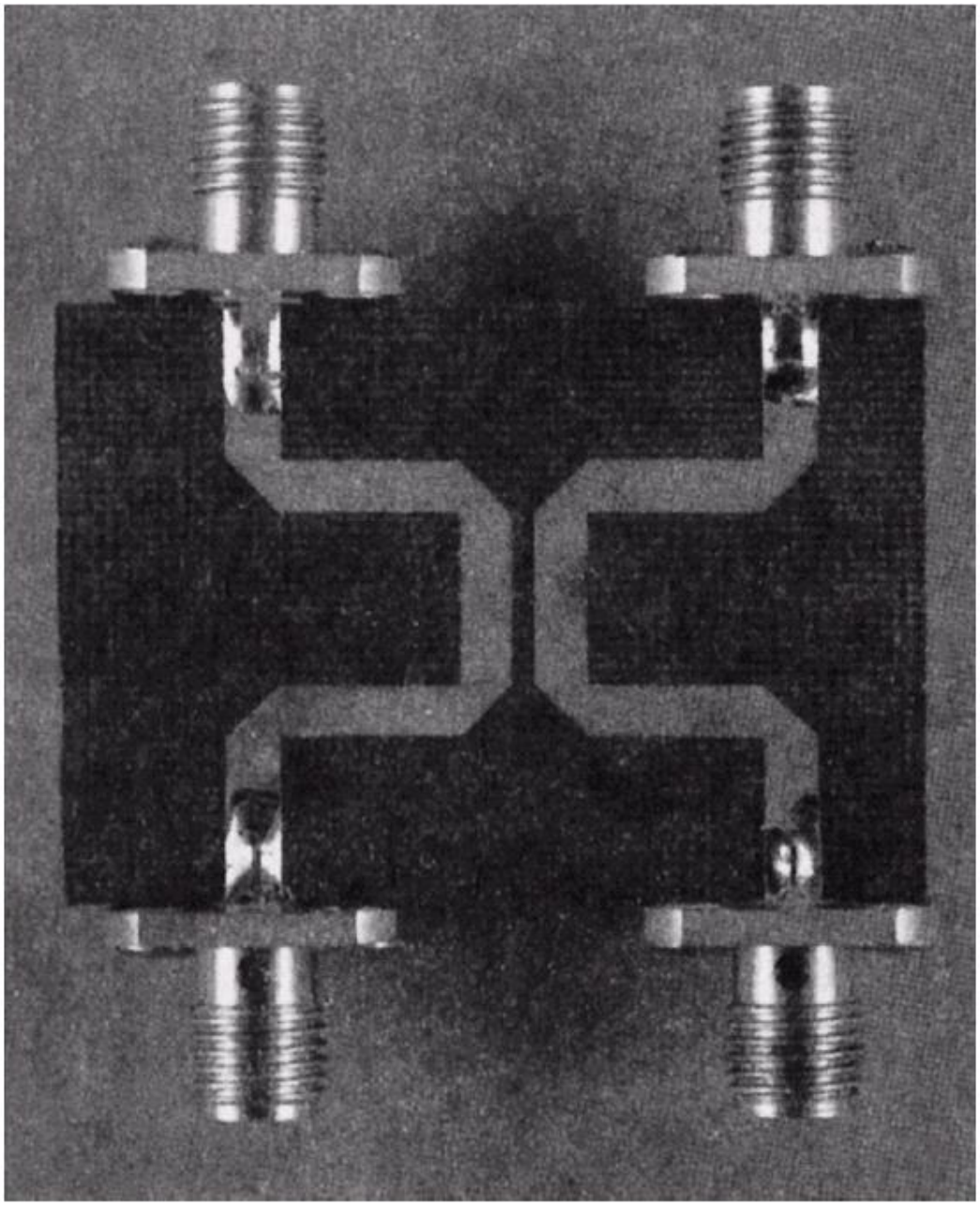

## Exemplu

Proiectaţi un cuplor prin proximitate de 20 dB, în tehnologie stripline, folosind o distanta între planele de masă de 0.158 cm şi cu o permitivitate electrică relativa de 2.56, pe o impedanţa de 50 Ω, la frecvenţa de 3 GHz. Reprezentaţi cuplajul şi directivitatea între 1 si 5 GHz.

# Soluţie

$$C = 10^{-20/20} = 0.1$$

$$Z_{co} = 50\sqrt{\frac{0.9}{1.1}} = 45.23\Omega$$

$$Z_{ce} = 50\sqrt{\frac{1.1}{0.9}} = 55.28\Omega$$

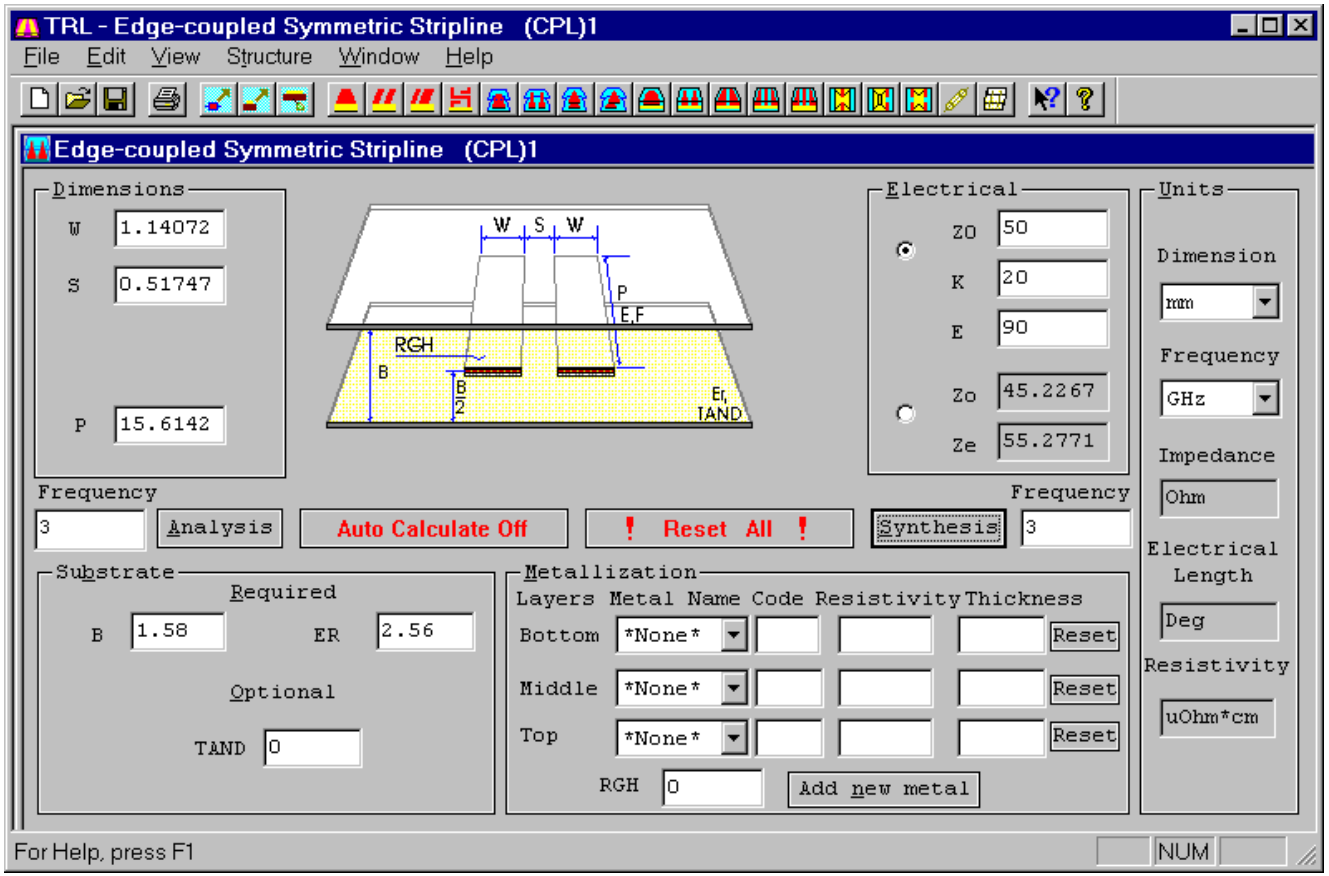


$$Z_{ce} = Z_0\sqrt{\frac{1+C}{1-C}}\ ,\ Z_{co} = Z_0\sqrt{\frac{1-C}{1+C}}$$

# Simulare

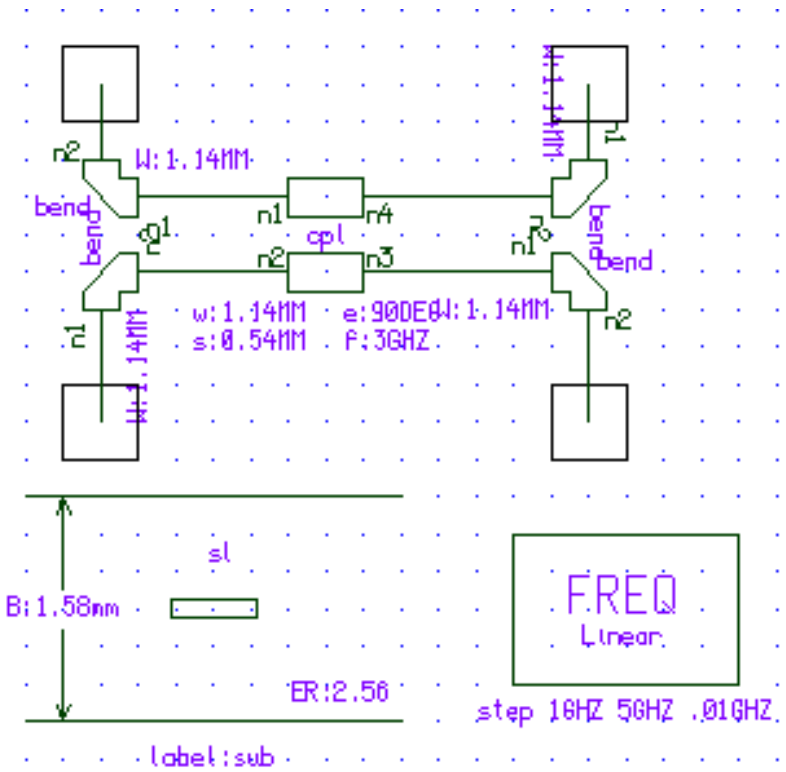
W:1.14MM
bend
n1
n4
cpl
n2
n3
w:1.14MM
s:0.54MM
e:90DEG
f:3GHZ
sl
B:1.58mm
ER:2.56
FREQ
Linear
step 1GHZ 5GHZ .01GHZ
label:sub

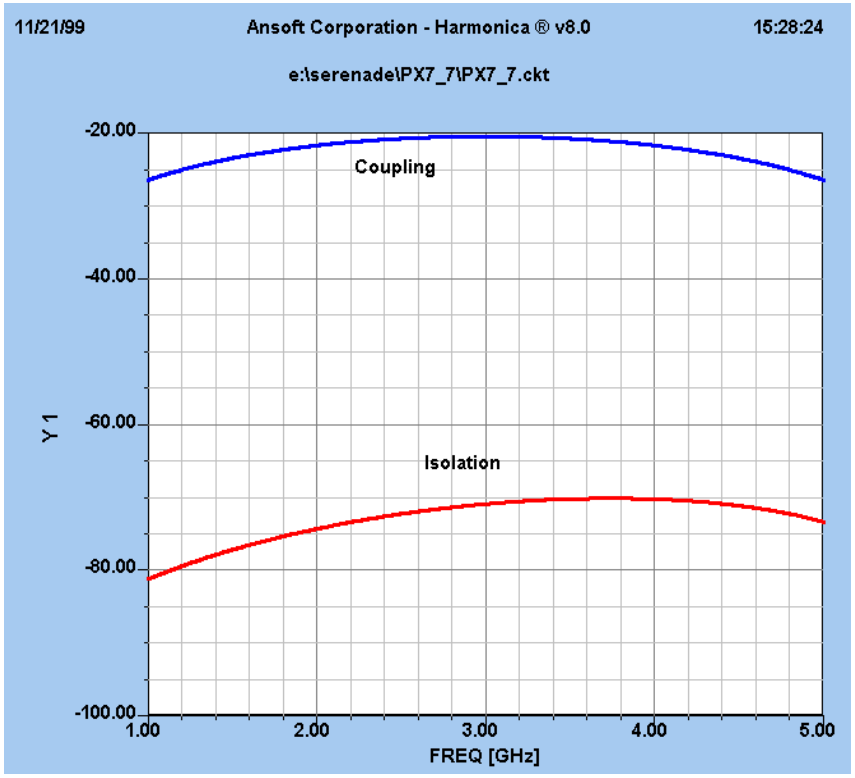
11/21/99
Ansoft Corporation - Harmonica ® v8.0
15:28:24
e:\serenade\PX7_7\PX7_7.ckt
Coupling
Isolation
Y1
-20.00
-40.00
-60.00
-80.00
-100.00
1.00
2.00
3.00
4.00
5.00
FREQ [GHz]

# Cuplor prin proximitate cu mai multe secţiuni

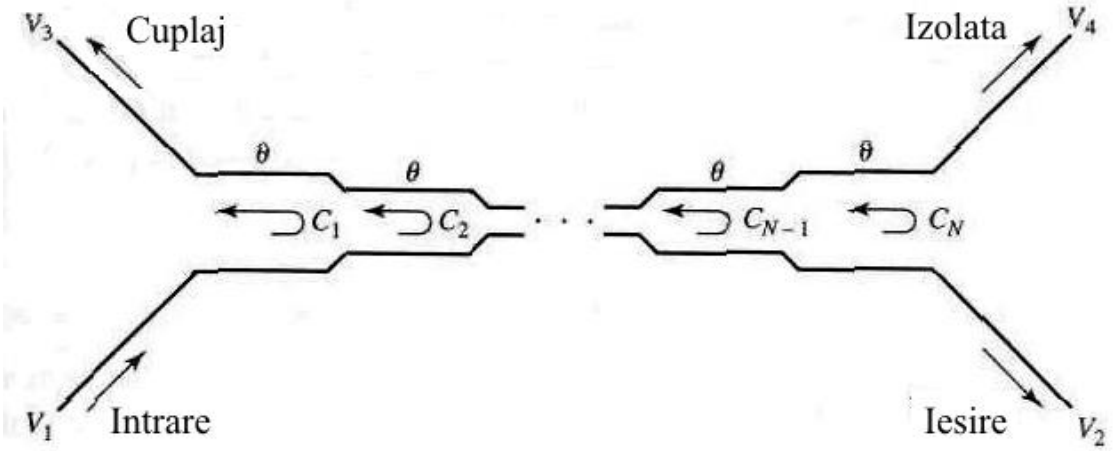


C<<1

$$\frac{V_3}{V_1} = b_3 = \frac{jC\sin\theta}{\cos\theta\sqrt{1-C^2} + j\sin\theta} = \frac{jCtg\theta}{\sqrt{1-C^2} + jtg\theta} \approx \frac{jCtg\theta}{1+jtg\theta} = jC\sin\theta e^{-j\theta}$$

$$\frac{V_2}{V_1} = b_2 = \frac{\sqrt{1-C^2}}{\cos\theta\sqrt{1-C^2} + j\sin\theta} \approx \frac{1}{\cos\theta + j\sin} = e^{-j\theta}$$

$$C = \frac{V_3}{V_1} = 2j\sin\theta e^{-j\theta} e^{-j(N-1)\theta}\left[C_1\cos(N-1)\theta + C_2\cos(N-3)\theta + \ldots + \frac{1}{2}C_{\frac{N+1}{2}}\right]$$

## Exemplu

Să se proiecteze un cuplor cu trei secţiuni, avînd un cuplaj de 20 dB, cu caracteristică binomiala (maxim plat), pe o impedanţă de 50 Ω, la frecvenţa centrală de 3 GHz. Să se reprezinte grafic cuplajul şi directivitatea între 1 şi 5 GHz.

# Solutie

$$(N=3) \qquad C_0 = 20\,dB \qquad \theta = \pi/2$$

$$\left.\frac{d^n}{d\theta^n} C(\theta)\right|_{\theta=\pi/2} = 0,\ n = 1,2$$

$$C = \left|\frac{V_3}{V_1}\right| = 2\sin\theta\left[C_1\cos 2\theta + \frac{1}{2}C_2\right] = C_1(\sin 3\theta - \sin\theta) + C_2\sin\theta$$

$$\frac{dC}{d\theta} = \left[3C_1\cos 3\theta + (C_2 - C_1)\cos\theta\right]\Big|_{\theta=\pi/2} = 0$$

$$\frac{d^2C}{d\theta^2} = \left[-9C_1\sin 3\theta - (C_2 - C_1)\sin\theta\right]\Big|_{\theta=\pi/2} = 10C_1 - C_2 = 0$$

$$\begin{cases} C_2 - 2C_1 = 0.1 \\ 10C_1 - C_2 = 0 \end{cases}$$

$$\begin{cases} C_1 = C_3 = 0.0125 \\ C_2 = 0.125 \end{cases}$$

$$Z_{0e}^1 = Z_{0e}^3 = 50\sqrt{\frac{1.0125}{0.9875}} = 50.63\,\Omega$$

$$Z_{0o}^1 = Z_{0o}^3 = 50\sqrt{\frac{0.9875}{1.0125}} = 49.38\,\Omega$$

$$Z_{0e}^2 = 50\sqrt{\frac{1.125}{0.875}} = 56.69\,\Omega$$

$$Z_{0o}^2 = 50\sqrt{\frac{0.875}{1.125}} = 44.10\,\Omega$$

# Simulare

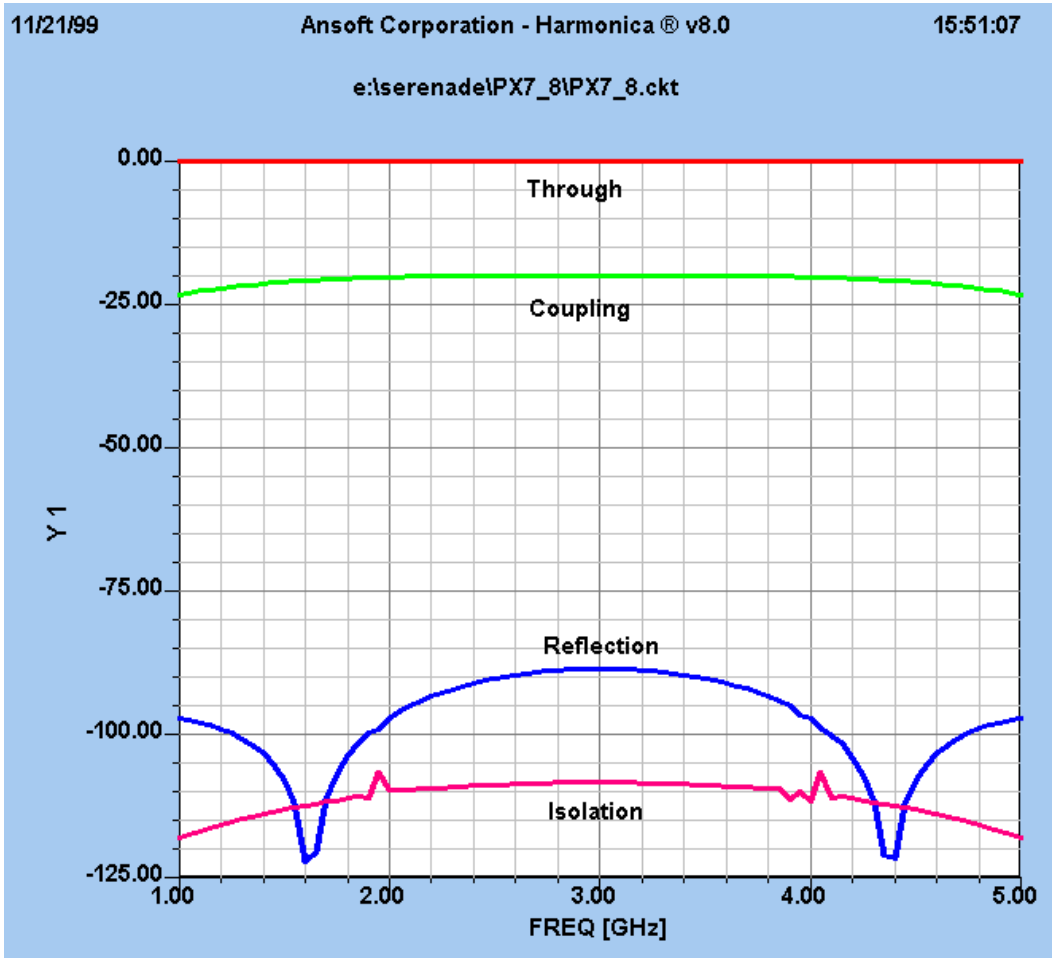
11/21/99
Ansoft Corporation - Harmonica ® v8.0
15:51:07
e:\serenade\PX7_8\PX7_8.ckt
0.00
-25.00
-50.00
-75.00
-100.00
-125.00
Y 1
Through
Coupling
Reflection
Isolation
1.00
2.00
3.00
4.00
5.00
FREQ [GHz]

# Cuplorul Lange

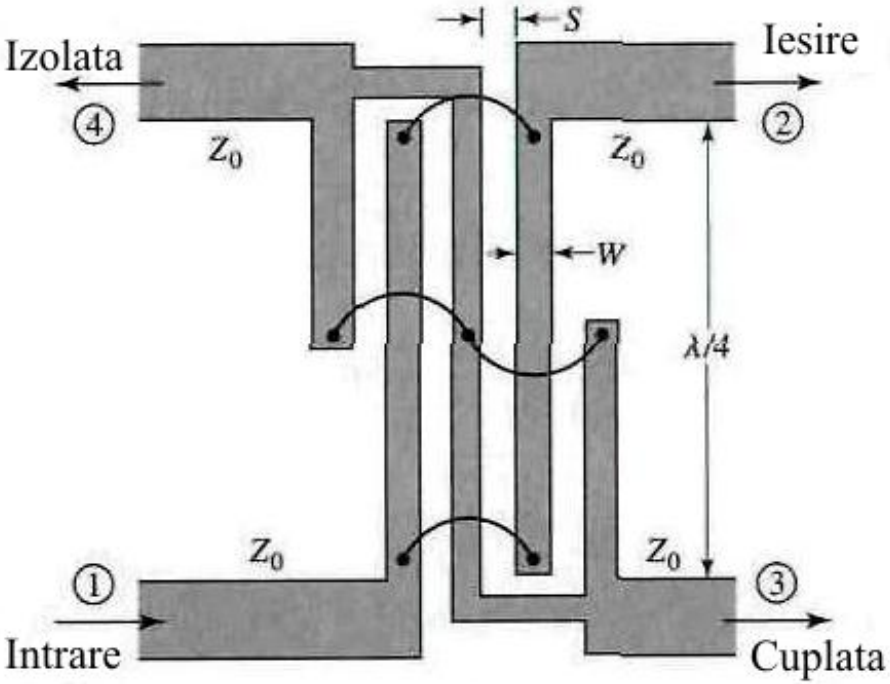


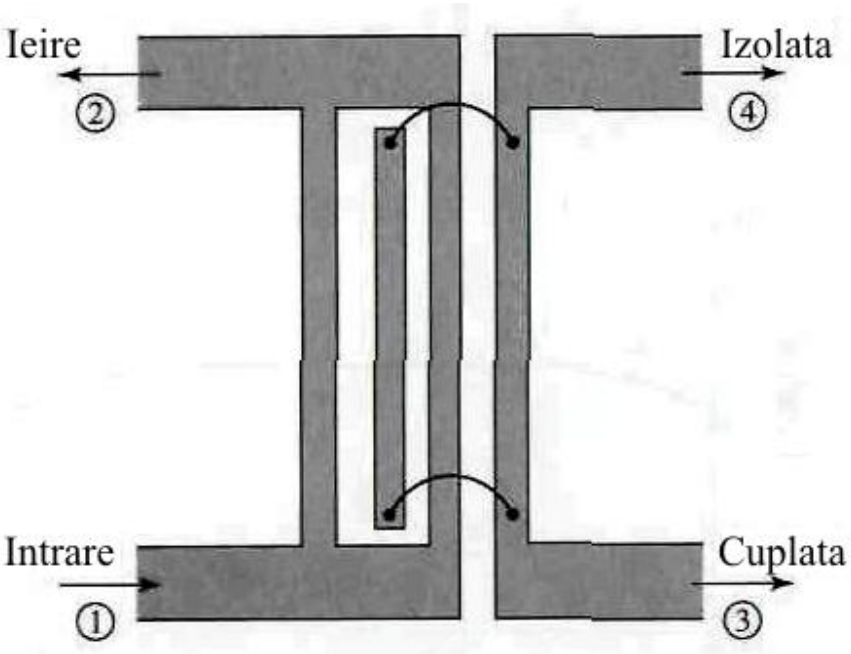

# Cuplor Lange

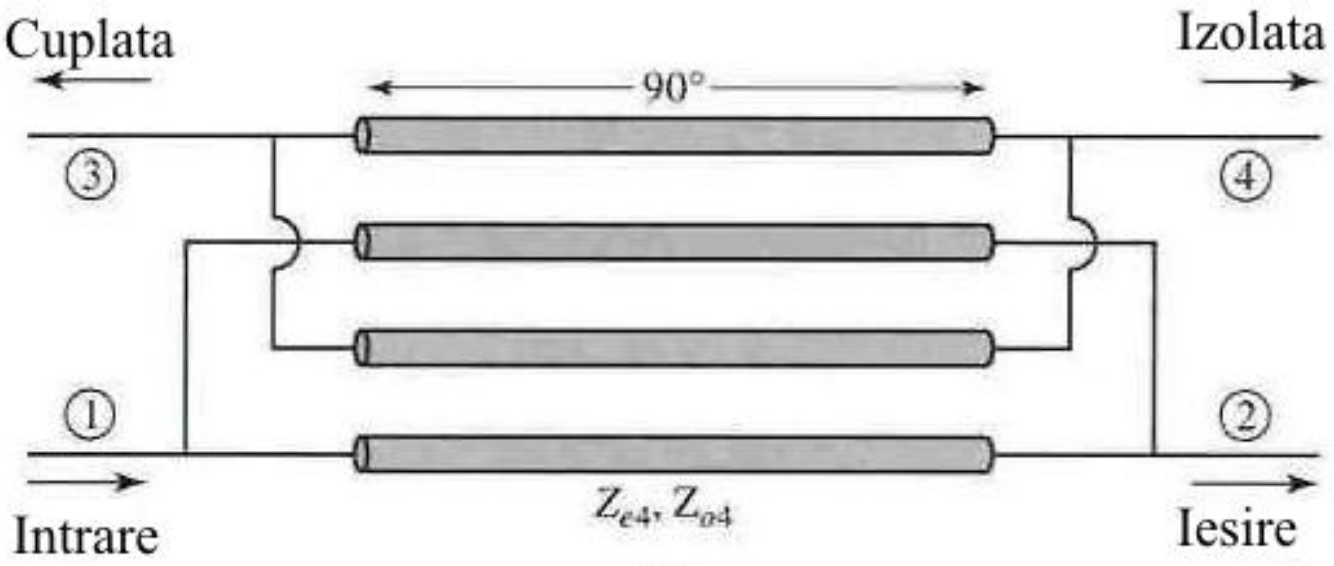


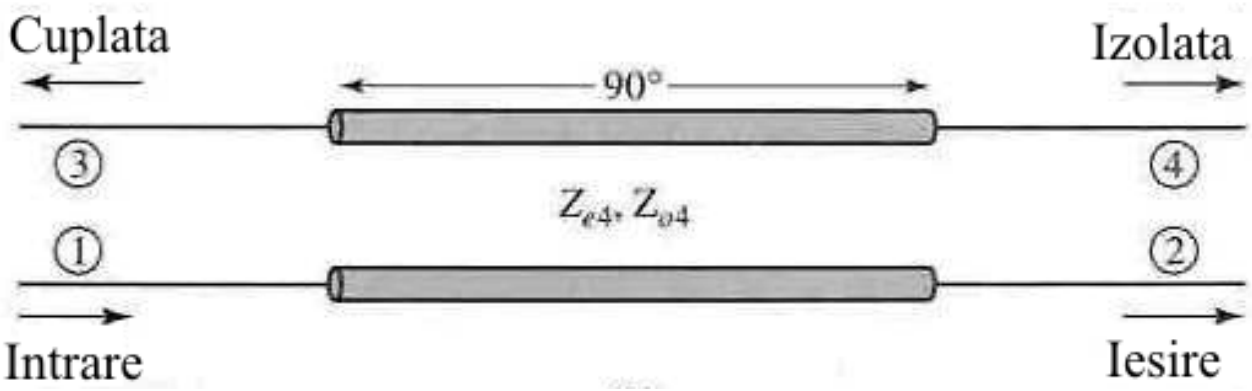

# Modelul de circuit

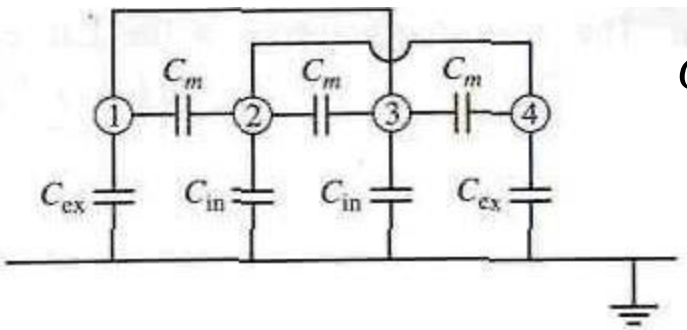


$$C_{in} = C_{ex} - \frac{C_{ex}C_m}{C_{ex} + C_m}$$

$$C_{e4} = C_{ex} + C_{in}$$

$$C_{o4} = C_{ex} + C_{in} + 6C_m$$

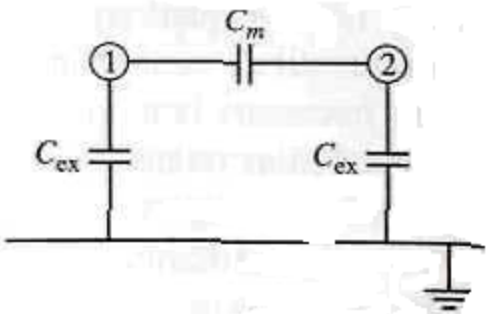


$$C_e = C_{ex}$$

$$C_o = C_{ex} + 2C_m$$

$$Z_{e4} = \frac{1}{vC_{e4}}$$

$$Z_{o4} = \frac{1}{vC_{o4}}$$

$$C_{e4} = \frac{C_e(3C_e + C_o)}{C_e + C_o}$$

$$C_{o4} = \frac{C_o(3C_o + C_e)}{C_e + C_o}$$

$$Z_{e4} = Z_{0e}\frac{Z_{0e} + Z_{0o}}{3Z_{0o} + Z_{0e}}$$

$$Z_{o4} = Z_{0o}\frac{Z_{0e} + Z_{0o}}{3Z_{0e} + Z_{0o}}$$

$$Z_0 = \sqrt{Z_{e4}Z_{o4}} = \sqrt{\frac{Z_{0e}Z_{0o}(Z_{0o} + Z_{0e})^2}{(3Z_{0o} + Z_{0e})(3Z_{0e} + Z_{0o})}}$$

$$C = \frac{Z_{e4} - Z_{o4}}{Z_{e4} + Z_{o4}} = \frac{3\left(Z_{0e}^2 - Z_{0o}^2\right)}{3\left(Z_{0e}^2 + Z_{0o}^2\right) + 2Z_{0e}Z_{0o}}$$

$$\boxed{Z_{0e} = \frac{4C - 3 + \sqrt{9 - 8C^2}}{2C\sqrt{(1-C)/(1+C)}}Z_0}$$

$$\boxed{Z_{0o} = \frac{4C + 3 - \sqrt{9 - 8C^2}}{2C\sqrt{(1+C)/(1-C)}}Z_0}$$

# Cuplorul in inel

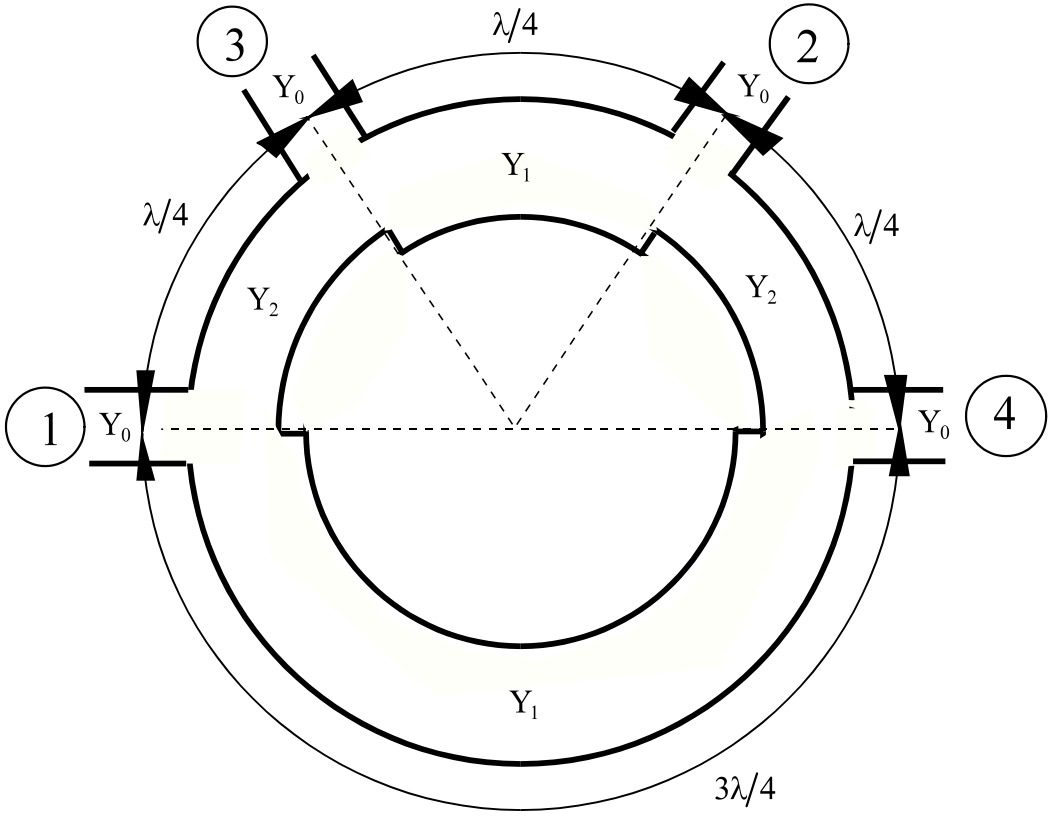

# Analiza cuplorului in inel

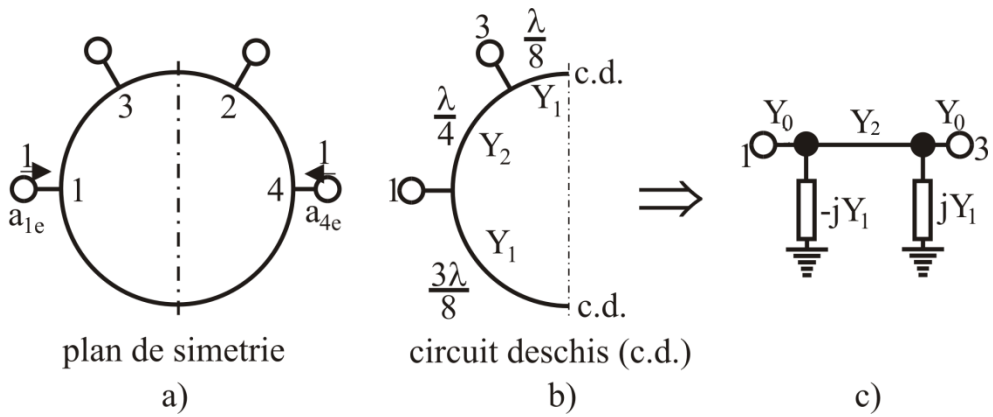


Modul par

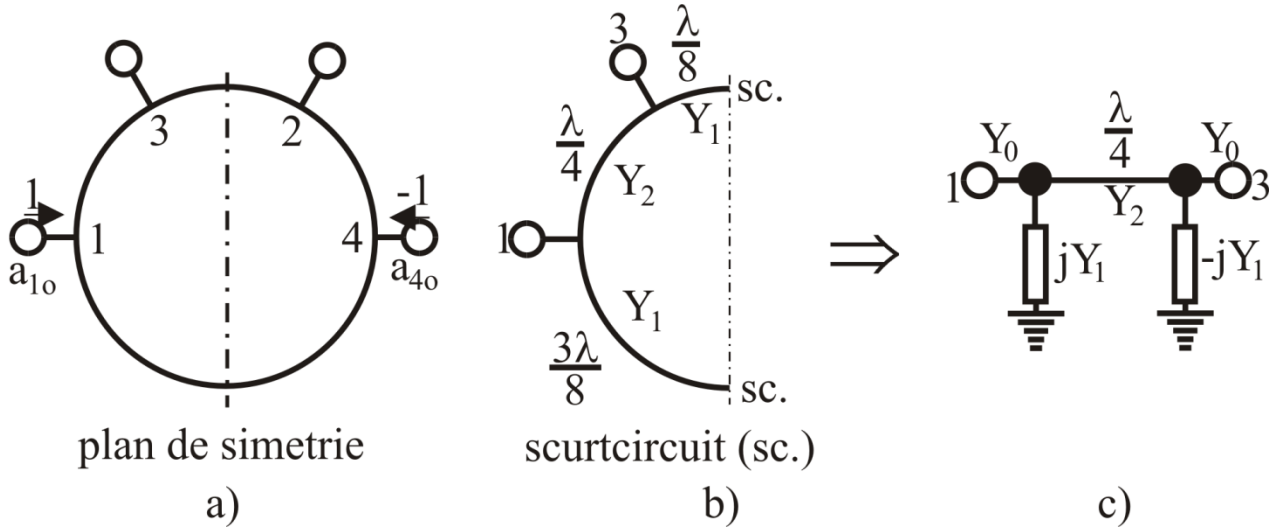


Modul impar

# Analiza cuplorului in inel

$$S_{11} = \frac{jz_2y_s + jz_2 - j(y_2 + y_e y_s z_2) - jy_e z_2}{jz_2y_s + jz_2 + j(y_2 + y_e y_s z_2) + jy_e z_2}$$

$$S_{12} = \frac{2}{jz_2y_s + jz_2 + j(y_2 + y_e y_s z_2) + jy_e z_2}$$

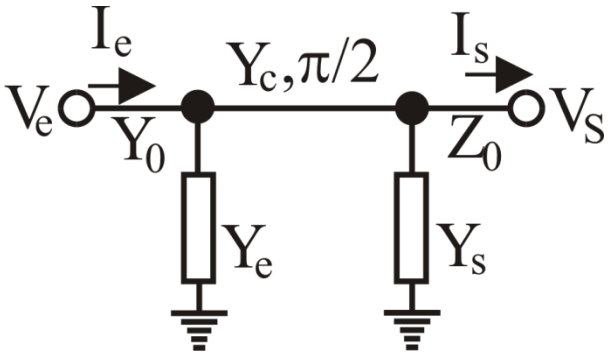


$$S_{21} = \frac{2}{jz_2y_s + jz_2 + j(y_2 + y_e y_s z_2) + jy_e z_2}$$

$$S_{22} = \frac{-jz_2y_s + jz_2 - j(y_2 + y_e y_s z_2) + jy_e z_2}{jz_2y_s + jz_2 + j(y_2 + y_e y_s z_2) + jy_e z_2}$$

**Pentru modul par:**

$$y_e = -jy_1$$
$$y_s = jy_1$$

$$S_{11e} = \frac{z_2 - y_2 - y_1^2 z_2 + 2jz_2y_1}{z_2 + y_2 + y_1^2 z_2}$$

$$S_{12e} = S_{21e} = \frac{-2j}{z_2 + y_2 + y_1^2 z_2}$$

$$S_{22e} = \frac{z_2 - y_2 - y_1^2 z_2 - 2jz_2y_1}{z_2 + y_2 + y_1^2 z_2}$$

## Conditia de adaptare

$$y_1^2 + y_2^2 = 1$$

$$[S] = \begin{bmatrix} 0 & 0 & -jy_2 & jy_1 \\ 0 & 0 & -jy_1 & -jy_2 \\ -jy_2 & -jy_1 & 0 & 0 \\ jy_1 & -jy_2 & 0 & 0 \end{bmatrix}$$

**Pe modul impar:**

$$y_e = jy_1$$
$$y_s = -jy_1$$

$$S_{11o} = \frac{z_2 - y_2 - y_1^2 z_2 - 2jz_2y_1}{z_2 + y_2 + y_1^2 z_2}$$

$$S_{12o} = S_{21o} = \frac{-2j}{z_2 + y_2 + y_1^2 z_2}$$

$$S_{22o} = \frac{z_2 - y_2 - y_1^2 z_2 + 2jz_2y_1}{z_2 + y_2 + y_1^2 z_2}$$

# Cuplorul in inel

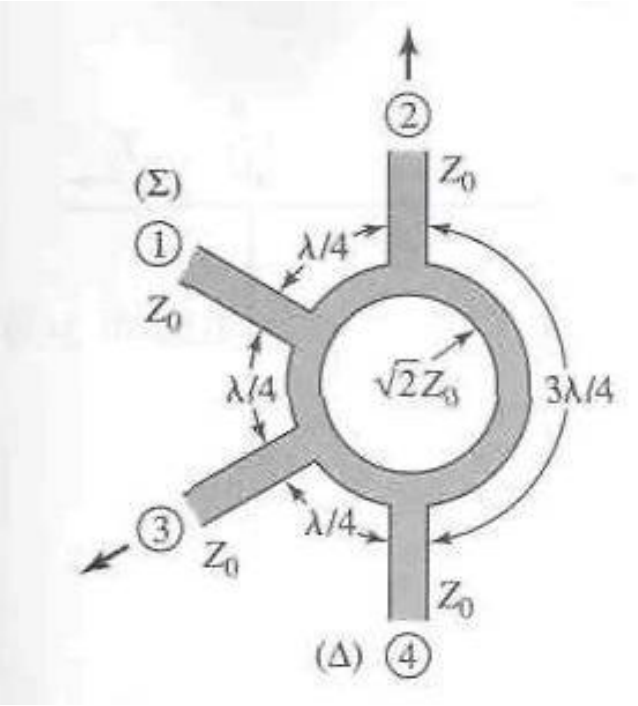


$$[S]=\begin{bmatrix} 0 & -jy_2 & -jy_1 & 0 \\ -jy_2 & 0 & 0 & jy_1 \\ -jy_1 & 0 & 0 & -jy_2 \\ 0 & jy_1 & -jy_2 & 0 \end{bmatrix}=-j\begin{bmatrix} 0 & \alpha & \beta & 0 \\ \alpha & 0 & 0 & -\beta \\ \beta & 0 & 0 & \alpha \\ 0 & -\beta & \alpha & 0 \end{bmatrix}$$

$$C(dB)=-20\log(\beta)=-20\log(y_1)$$

# Proiectarea şi performanţa unui cuplor în inel

Proiectaţi un cuplor în inel pe impedanţa de 50 Ω şi reprezentati mărimea parametrilor S între 0.5 si 1.5 din frecventa centrala.

$$\sqrt{2}Z_0 = 70.7\Omega$$

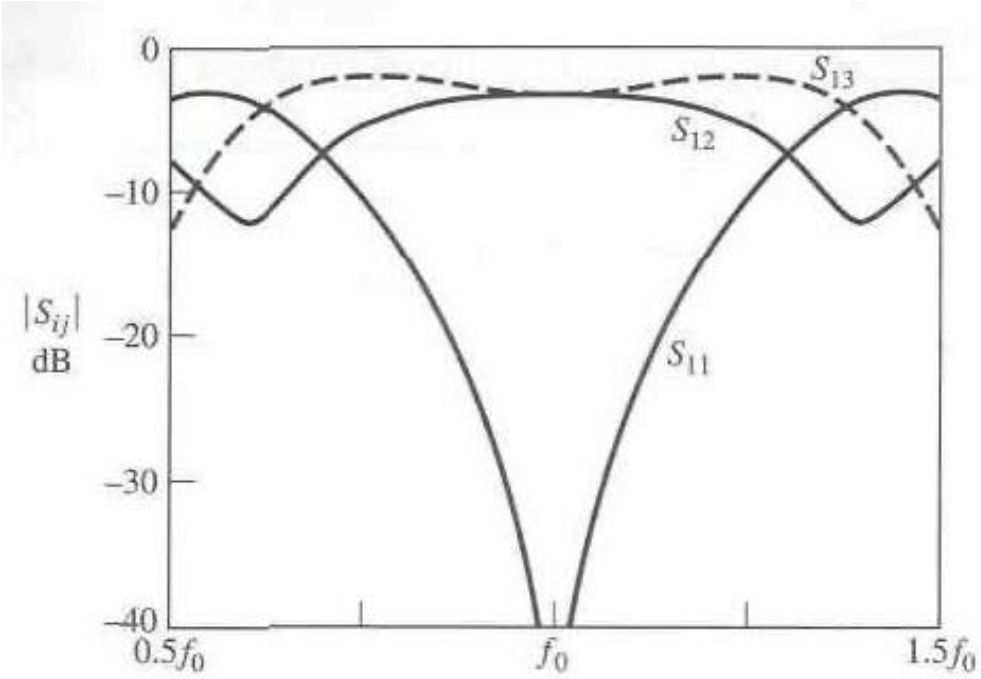

# Divizoare de Putere

# Divizoare de Putere

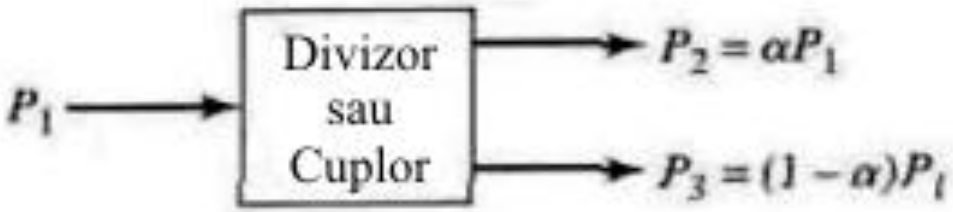


(a)

(b)

# Proprietati de baza ale cuploarelor directionale

## Circuite cu trei porti

$(S_{ij} = S_{ji})$ Reciproc

$S_{ii} = 0$ Adaptare simultana la toate portile

$\sum_k S_{ik} S_{kj}^* = \delta_{ij}$ Fara pierderi

$>$

$$|S_{13}|^2 + |S_{23}|^2 = 1$$

$$|S_{12}|^2 + |S_{23}|^2 = 1$$

$$|S_{12}|^2 + |S_{13}|^2 = 1$$

$$S_{13}^* S_{23} = 0$$

$$S_{23}^* S_{12} = 0$$

$$S_{12}^* S_{13} = 0$$

$\vee$

Un circuit cu trei porti NU poate fi fara pierderi, reciproc si adaptat simultan la toate portile

# Circuitul fara pierderi si adaptat simultan la toate portile este nereciproc

$$[S]=\begin{bmatrix} 0 & S_{12} & S_{13} \\ S_{21} & 0 & S_{23} \\ S_{31} & S_{32} & 0 \end{bmatrix}$$

$$\sum_k S_{ik}S_{kj}^{*} = \delta_{ij}$$

>

$$S_{31}^{*}S_{32} = 0$$

$$S_{21}^{*}S_{23} = 0$$

$$S_{12}^{*}S_{13} = 0$$

$$|S_{12}|^2 + |S_{13}|^2 = 1$$

$$|S_{21}|^2 + |S_{23}|^2 = 1$$

$$|S_{31}|^2 + |S_{32}|^2 = 1$$

$$1\begin{cases} S_{12} = S_{23} = S_{31} = 0 \\ |S_{21}| = |S_{32}| = |S_{13}| = 1 \end{cases}$$

$$[S] = \begin{bmatrix} 0 & 0 & 1 \\ 1 & 0 & 0 \\ 0 & 1 & 0 \end{bmatrix}$$

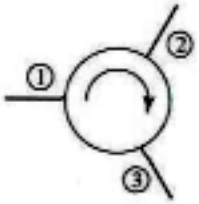


**CIRCULATOR**

$$2\begin{cases} S_{21} = S_{32} = S_{13} = 0 \\ |S_{12}| = |S_{23}| = |S_{31}| = 1 \end{cases}$$

$$[S] = \begin{bmatrix} 0 & 1 & 0 \\ 0 & 0 & 1 \\ 1 & 0 & 0 \end{bmatrix}$$

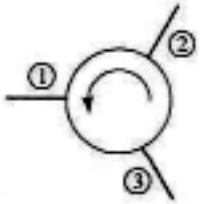

Circuitul fara pierderi si reciproc poate fi adaptat doar la doua porti

$$[S]=\begin{bmatrix} 0 & S_{12} & S_{13} \\ S_{12} & 0 & S_{23} \\ S_{13} & S_{23} & S_{33} \end{bmatrix}$$

$$\sum_k S_{ik} S_{kj}^* = \delta_{ij}$$

$$S_{13}^* S_{23} = 0 (a)$$

$$S_{12}^* S_{13} + S_{23}^* S_{33} = 0 (b)$$

$$S_{23}^* S_{12} + S_{33}^* S_{13} = 0 (c)$$

>

$$|S_{12}|^2 + |S_{13}|^2 = 1 (d)$$

$$|S_{12}|^2 + |S_{23}|^2 = 1 (e)$$

$$|S_{13}|^2 + |S_{23}|^2 + |S_{33}|^2 = 1 (f)$$

$$[S]=\begin{bmatrix} 0 & e^{j\theta} & 0 \\ e^{j\theta} & 0 & 0 \\ 0 & 0 & e^{j\phi} \end{bmatrix}$$

**Linie fara pierderi adaptata**

**+**

**Poarta dezadaptata**

Circuit reciproc si adaptat la toate portile trebuie sa fie cu pierderi

**Divizorul de putere cu izolare intre portile de iesire**

# Divizorul de Putere in T

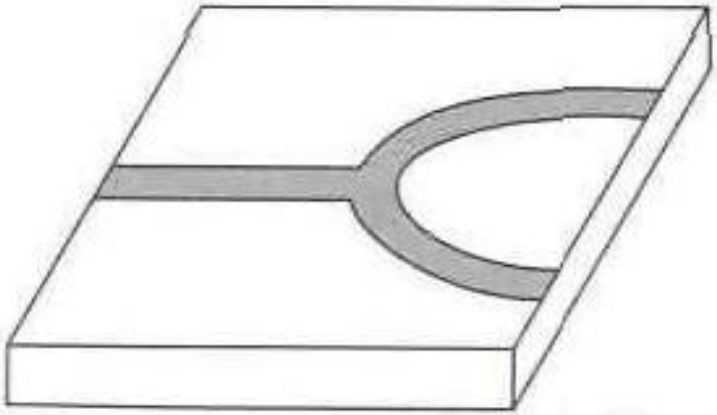

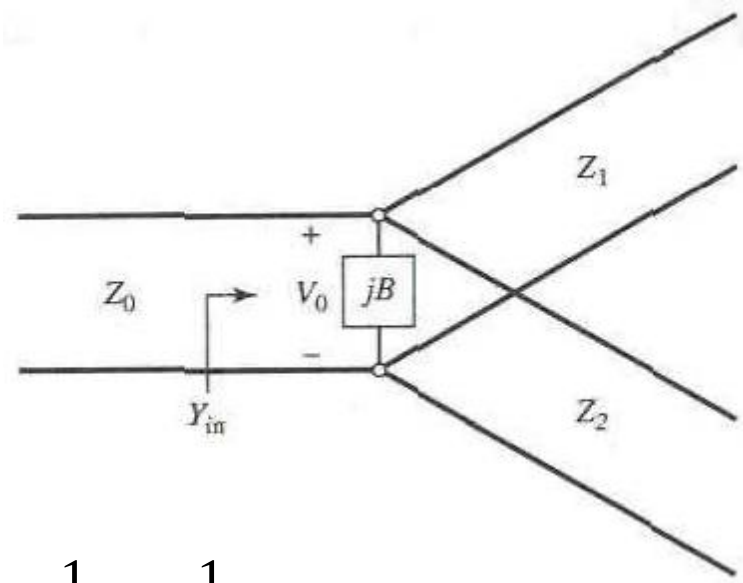


$$Y_{in} = jB + \frac{1}{Z_1} + \frac{1}{Z_2} = \frac{1}{Z_0}$$

$$B = 0 \Rightarrow \quad \frac{1}{Z_1} + \frac{1}{Z_2} = \frac{1}{Z_0}$$

# Exemplu

Un divizor de putere în T, fără pierderi, are o impedanţă a sursei de 50 Ω.
Calculaţi impedanţele caracteristice de ieşire astfel încît puterea de intrare sa fie impărţită în raportul 2:1.
Calculaţi coeficienţii de reflexie văzuţi privind în porţile de ieşire.

# Solutie

$$P_{in} = \frac{1}{2}\frac{V_0^2}{Z_0}$$

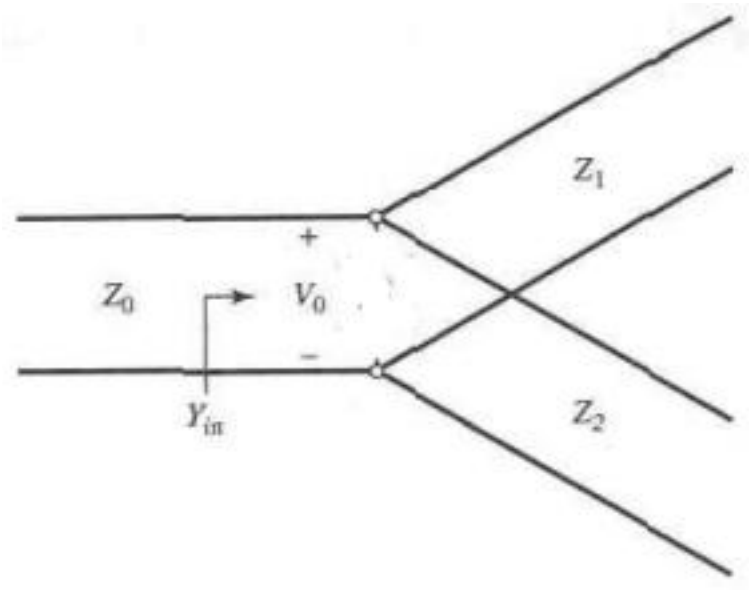


$$P_1 = \frac{1}{2}\frac{V_0^2}{Z_1} \overset{n}{=} \frac{1}{3}P_{in}$$

$$\Gamma_1 = \frac{30-150}{30+150} = -0.666$$

$$P_2 = \frac{1}{2}\frac{V_0^2}{Z_2} \overset{n}{=} \frac{2}{3}P_{in}$$

$$\Gamma_2 = \frac{37.5-75}{37.5+75} = -0.333$$

$$Z_1 = 3Z_0 = 150\Omega$$

$$Z_2 = 3Z_0/2 = 75\Omega$$

$$Z_{in} = 75 \parallel 150 = 50\Omega$$

# Divizorul Rezistiv

$$Z = \frac{Z_0}{3} + Z_0 = \frac{4Z_0}{3}$$

$$Z_{in} = \frac{Z_0}{3} + \frac{2Z_0}{3} = Z_0$$

$$S_{11} = S_{22} = S_{33} = 0$$

$$V = V_1 \frac{2Z_0/3}{Z_0/3 + 2Z_0/3} = \frac{2}{3} V_1$$

$$V_2 = V_3 = V \frac{Z_0}{Z_0/3 + Z_0} = \frac{3}{4} V = \frac{1}{2} V_1$$

$$S_{21} = S_{31} = S_{23} = 1/2$$

$$P_2 = P_3 = \frac{1}{2} \frac{(1/2 V_1)^2}{Z_0} = \frac{1}{8} \frac{V_1^2}{Z_0} = \frac{1}{4} P_{in}$$

$$P_{in} = \frac{1}{2} \frac{V_1^2}{Z_0}$$

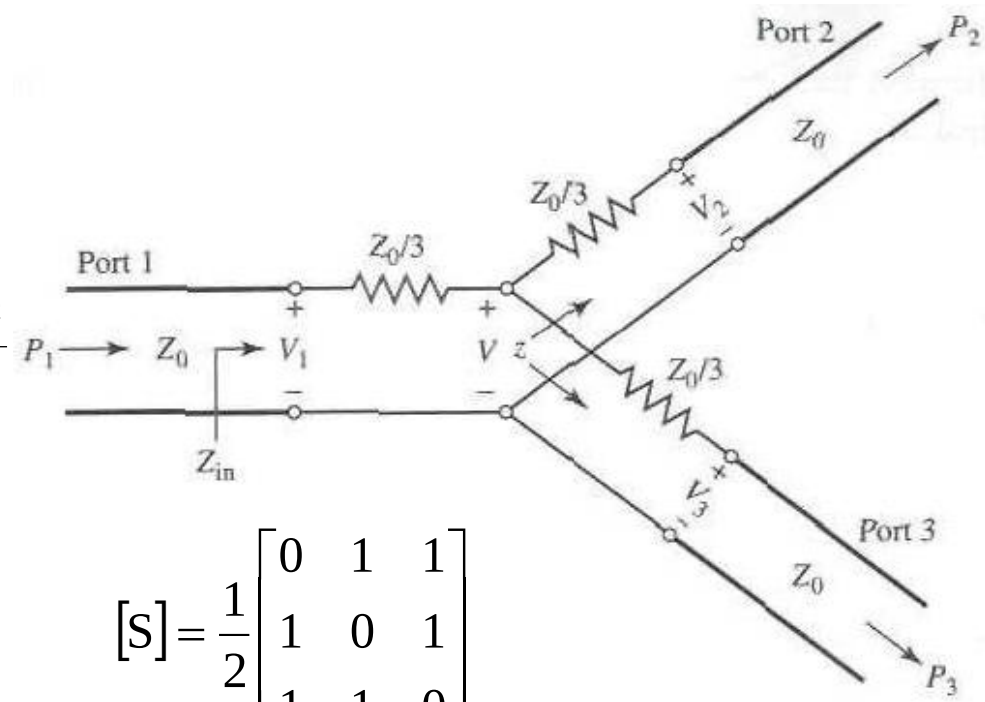


$$[S] = \frac{1}{2} \begin{bmatrix} 0 & 1 & 1 \\ 1 & 0 & 1 \\ 1 & 1 & 0 \end{bmatrix}$$

$$P_2 = P_3 = \frac{1}{2} \frac{(1/2 V_1)^2}{Z_0} = \frac{1}{8} \frac{V_1^2}{Z_0} = \frac{1}{4} P_{in}$$

# Divizorul Wilkinson

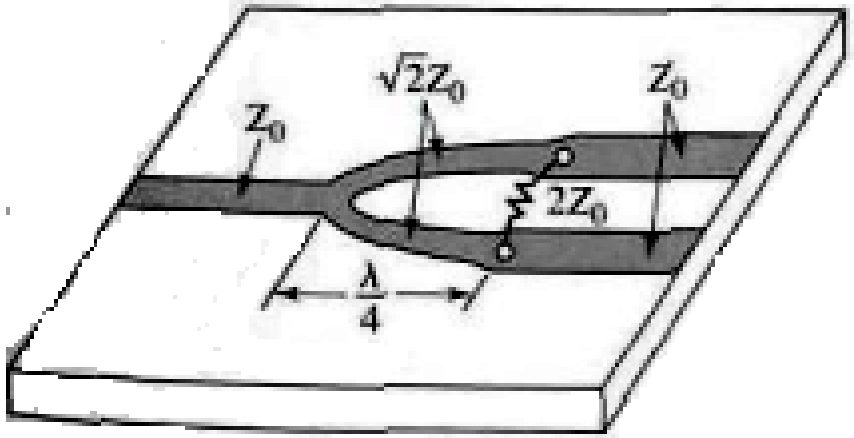


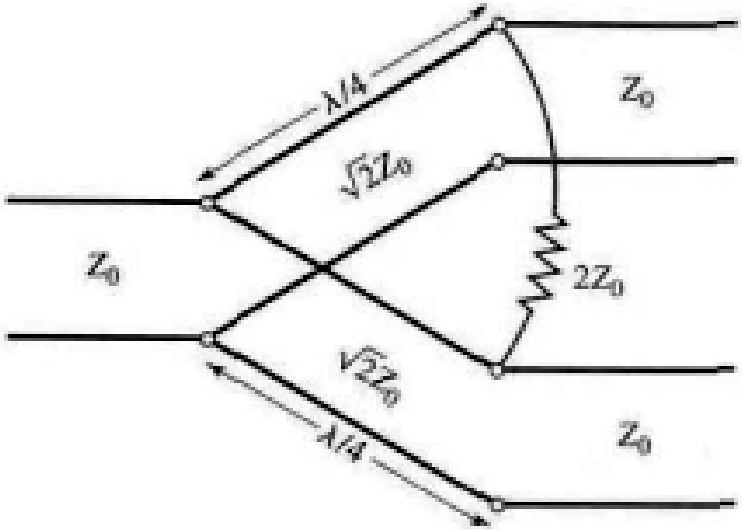

# Analiza pe modul par-impar

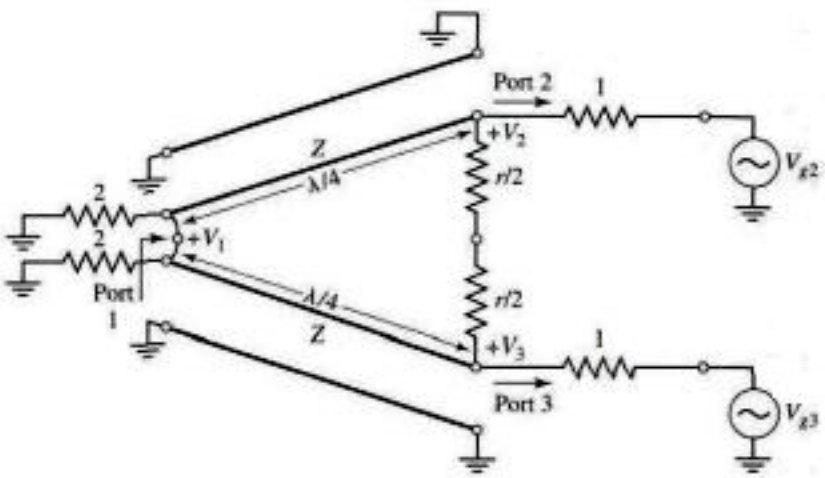


Modul par

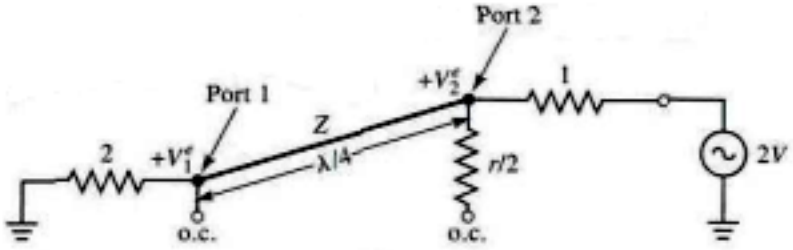


Modul impar

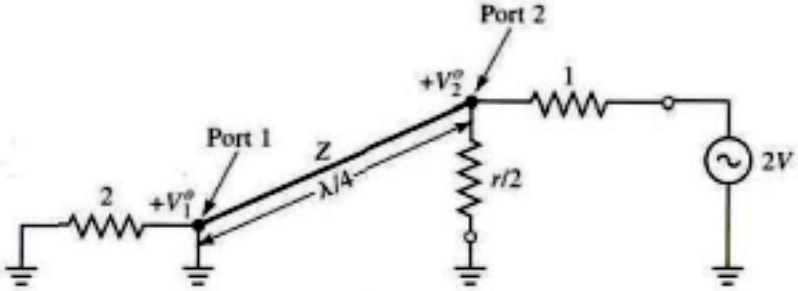

# Modul par

$$Z_{in2}^{e} = \frac{Z^2}{2}$$

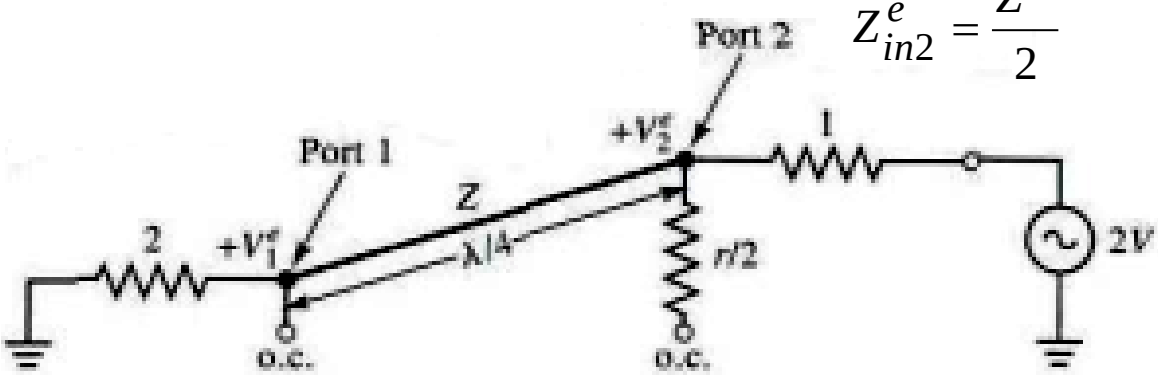


$$V(x) = V^{+}\left(e^{-j\beta x} + \Gamma e^{j\beta x}\right)$$

$$V_2^e = V(-\lambda/4) = jV^{+}(1-\Gamma) = V$$

$$V_1^e = V(0) = V^{+}(1+\Gamma) = jV\frac{\Gamma+1}{\Gamma-1}$$

$$\Gamma = \frac{2-\sqrt{2}}{2+\sqrt{2}}$$

$$V_1^e = -jV\sqrt{2}$$

# Modul impar

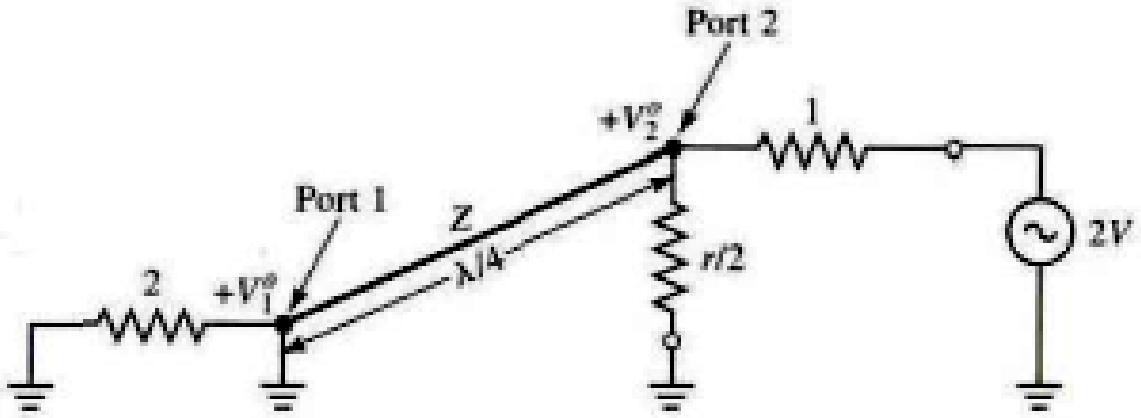

# Calculul lui S11

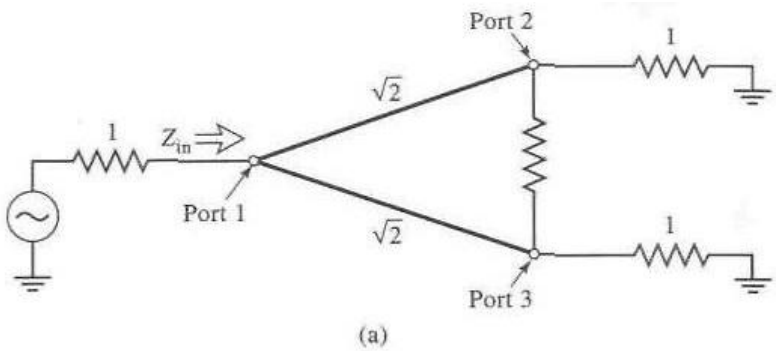


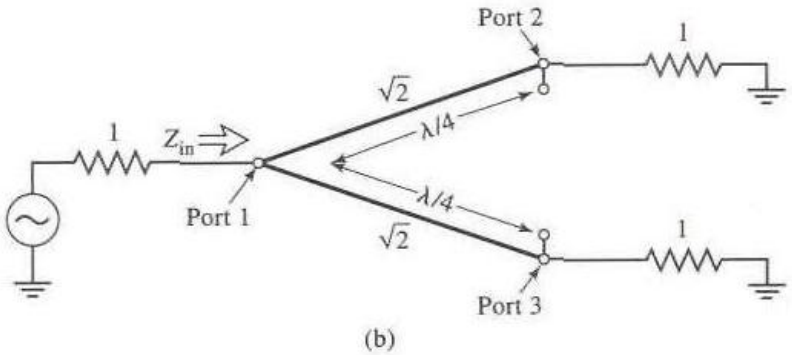


$$Z_{in} = \frac{1}{2}\left(\sqrt{2}\right)^2 = 1$$

$$S_{11} = 0$$

$$S_{22} = S_{33} = 0$$

$$S_{12} = S_{21} = \frac{V_1^e + V_1^o}{V_2^e + V_2^o} = -j\sqrt{2}$$

$$S_{13} = S_{31} = -j\sqrt{2}$$

$$S_{23} = S_{32} = 0$$

# Exemplu

- Proiectaţi un divizor de putere Wilkinson de 3 dB, pe 50Ω, la frecvenţa $f_0$ şi reprezentaţi grafic pierderile de întoarcere $(S_{11})$, pierderile de inserţie $(S_{21} = S_{31})$ şi izolarea $(S_{23} = S_{32})$ în funcţie de frecventă.

# Solutie

$$Z = \sqrt{2}Z_0 = 70.7\Omega$$

$$R = 2Z_0 = 100\Omega$$

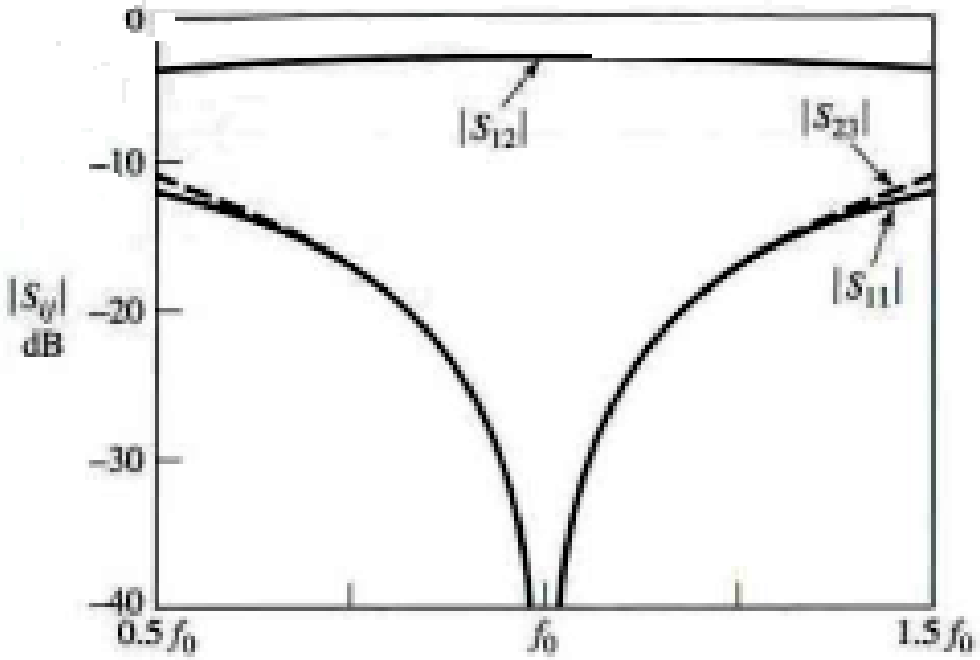

# Divizorul Wilkinson cu puteri inegale

$$K^2 = P_3/P_2$$

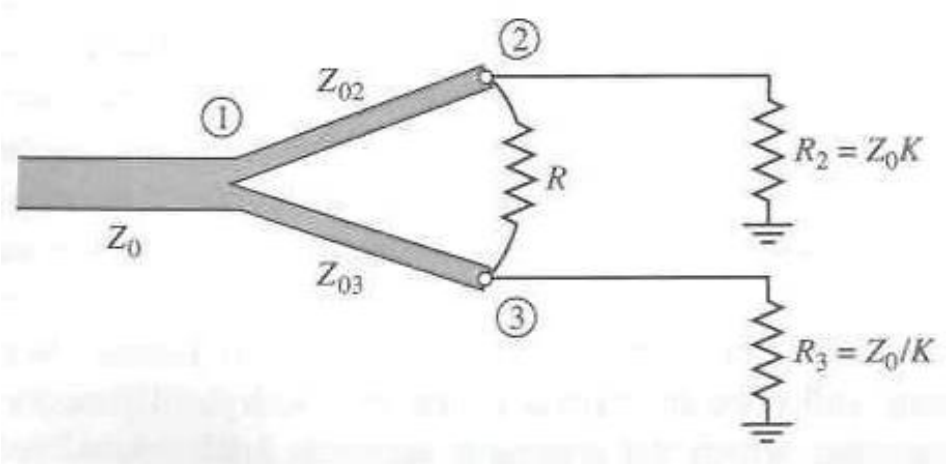


$$Z_{03} = Z_0\sqrt{\frac{1+K^2}{K^3}}$$

$$Z_{02} = K^2 Z_{03} = Z_0\sqrt{K\left(1+K^2\right)}$$

$$R = Z_0\left(K + \frac{1}{K}\right)$$
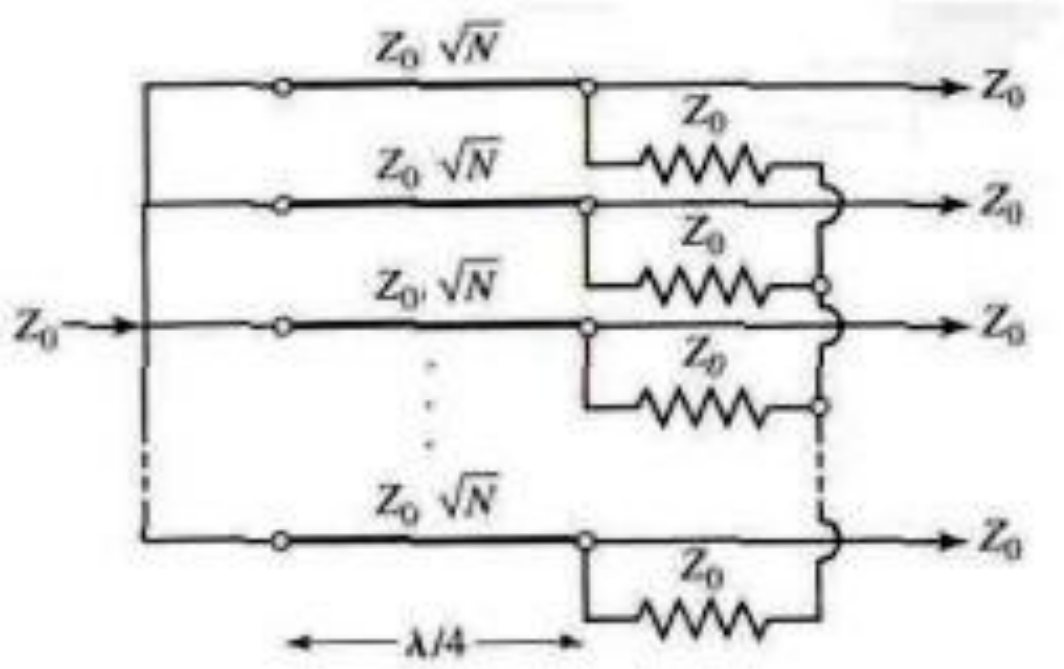
# Divizorul Wilkinson cu N cai