Curs 13

Seminar

BILET DE EXAMEN

- Se consideră un circuit în Π, reciproc, format numai din rezistențe. Să se calculeze matricea S a acestui circuit. (2p)
- Proiectați un transformator binomial cu patru secțiuni, care să adapteze o sarcină de 10Ω la o linie de 50Ω. Care este banda acestui transformator pentru $\Gamma_m = 0.05$. (2p)
- Calculați parametrii S pentru un TEC unilateral, la frecvența de 5 GHz, folosind modelul de transistor cu următorii parametri: $R_i = 7\Omega$ $R_{ds} = 400\Omega$ $C_{gs} = 0.3pF$ $g_m = 30mS$ (3p)
- Proiectați un divisor cu joncțiune în T care are o impedanță a sursei de 30Ω, pentru a obține un raport de puteri la ieşire de 3 :1. Proiectați transformatoare in sfert de lungime de undă care să convertească impedanța liniilor de ieşire la 30Ω. (3p)

Problema 2

- Proiectați un transformator binomial cu patru secțiuni, care să adapteze o sarcină de 10Ω la o linie de 50Ω. Care este banda acestui transformator pentru $\Gamma_m = 0.05$.

$$A = 2^{-N}\frac{Z_L - Z_0}{Z_L + Z_0} \qquad C_n^N = \frac{N!}{(N-n)!\,n!}$$

$$\ln\frac{Z_{n+1}}{Z_n} \approx 2\Gamma_n = 2AC_n^N = 2\left(2^{-N}\right)\frac{Z_L - Z_0}{Z_L + Z_0}C_n^N \approx 2^{-N}C_n^N \ln\frac{Z_L}{Z_0}$$

$$\frac{\Delta f}{f_0} = \frac{2(f_0 - f_m)}{f_0} = 2 - \frac{2f_m}{f_0} = 2 - \frac{4\theta_m}{\pi} = 2 - \frac{4}{\pi}\arccos\left[\frac{1}{2}\left(\frac{\Gamma_m}{|A|}\right)^{1/N}\right]$$

EXEMPLU - Curs 4

- Să se proiecteze un transformator binomial cu trei secțiuni care să adapteze o sarcină de 50Ω la un fider de 100Ω şi să se calculeze banda de trecere pentru $\Gamma_m = 0.05$

Solutie

$$N = 3 \qquad Z_L = 50\Omega \qquad Z_0 = 100\Omega$$

$$A = 2^{-N}\frac{Z_L - Z_0}{Z_L + Z_0} \approx \frac{1}{2^{N+1}}\ln\frac{Z_L}{Z_0} = -0.0433$$

$$C_0^3 = \frac{3!}{3!0!} = 1 \qquad C_1^3 = \frac{3!}{2!1!} = 3 \qquad C_2^3 = \frac{3!}{1!2!} = 3$$

$n = 0$

$$\ln Z_1 = \ln Z_0 + 2^{-N} C_0^3 \ln\frac{Z_L}{Z_0} = \ln 100 + 2^{-3}(1)\ln\frac{50}{100} = 4.518$$

$$Z_1 = 91.7\Omega$$

$n = 1$

$$\ln Z_2 = \ln Z_1 + 2^{-N} C_1^3 \ln\frac{Z_L}{Z_0} = \ln 91.7 + 2^{-3}(3)\ln\frac{50}{100} = 4.26$$

$$Z_2 = 70.7\Omega$$

$n = 2$

$$\ln Z_3 = \ln Z_2 + 2^{-N} C_2^3 \ln\frac{Z_L}{Z_0} = \ln 70.7 + 2^{-3}(3)\ln\frac{50}{100} = 4.00$$

$$Z_3 = 54.5\Omega$$

$$\frac{\Delta f}{f_0} = 2 - \frac{4}{\pi}\arccos\left[\frac{1}{2}\left(\frac{\Gamma_m}{|A|}\right)^{1/N}\right] = 2 - \frac{4}{\pi}\arccos\left[\frac{1}{2}\left(\frac{0.05}{0.0433}\right)^{1/3}\right] = 0.70$$

Solutie Mathcad

$Zs := 50\Omega \qquad Zl := 10\Omega \qquad \Gamma m := 0.05 \qquad N := 4$

$$A := 2^{-N} \cdot \frac{Zl - Zs}{Zl + Zs} \qquad A = -0.042$$

$$\Delta ff0 := 2 - \frac{4}{\pi} \cdot acos\left[\frac{1}{2} \cdot \left(\frac{\Gamma m}{|A|}\right)^{\frac{1}{N}}\right] \qquad \Delta ff0 = 0.701$$

$C40 := combin(4,0) \qquad C40 = 1 \qquad C41 := combin(4,1) \qquad C41 = 4$

$C42 := combin(4,2) \qquad C42 = 6 \qquad C43 := combin(4,3) \qquad C43 = 4$

$$Z := \left| \begin{array}{l} Z_0 \leftarrow Zs \\ \text{for } k \in 0..3 \\ \quad Z_{k+1} \leftarrow Z_k \cdot e^{2^{-N} \cdot combin(4,k) \cdot \ln\left(\frac{Zl}{Zs}\right)} \\ Z \end{array} \right. \qquad Z = \begin{pmatrix} 50 \\ 45.215 \\ 30.237 \\ 16.536 \\ 11.058 \end{pmatrix} \Omega$$

Problema 4

- Proiectați un divisor cu joncțiune în T care are o impedanță a sursei de 30Ω, pentru a obține un raport de puteri la ieşire de 3 :1. Proiectați transformatoare in sfert de lungime de undă care să convertească impedanța liniilor de ieşire la 30Ω. (3p)

Exemplu – Curs 7

- Un divizor de putere în T, fără pierderi, are o impedanță a sursei de 50 Ω. Calculați impedanțele caracteristice de ieşire astfel încît puterea de intrare sa fie impărțită în raportul 2:1. Calculați coeficienții de reflexie văzuți privind în porțile de ieşire.

Solutie

$$P_1 = \frac{1}{2}\frac{V_0^2}{Z_1} \overset{n}{=} \frac{1}{3} P_{in}$$

$$\Gamma_1 = \frac{30-150}{30+150} = -0.666$$

$$P_{in} = \frac{1}{2}\frac{V_0^2}{Z_0}$$

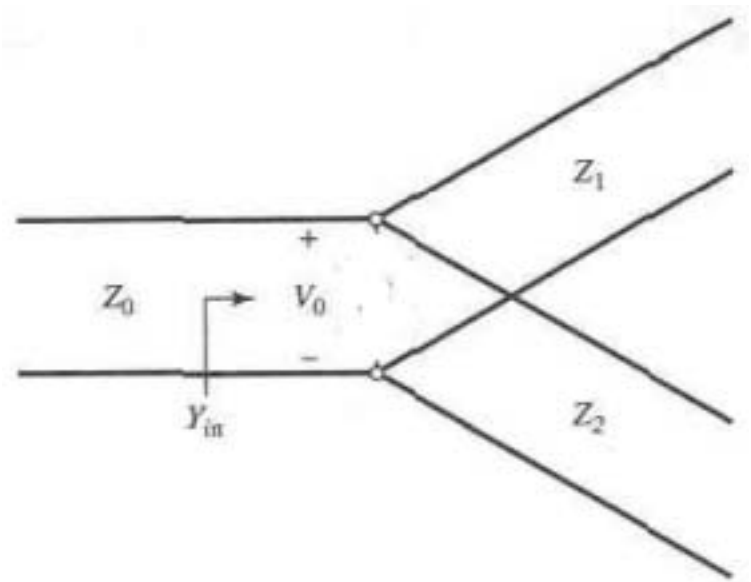

$$P_2 = \frac{1}{2}\frac{V_0^2}{Z_2} \overset{n}{=} \frac{2}{3} P_{in}$$

$$\Gamma_2 = \frac{37.5-75}{37.5+75} = -0.333$$

$$Z_1 = 3Z_0 = 150\Omega$$

$$Z_2 = 3Z_0/2 = 75\Omega$$

$$Z_{in} = 75 \parallel 150 = 50\Omega$$

Solutie

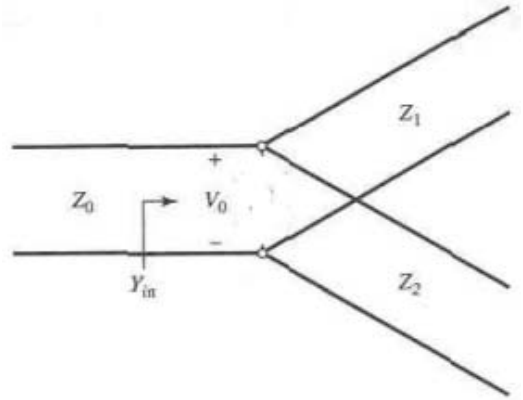

- Divizor

$$P_{in} = \frac{1}{2}\frac{V_0^2}{Z_0}$$

$$\begin{cases} P_1 + P_2 = P_{in} \\ P_1 : P_2 = 3:1 \end{cases} \Rightarrow \begin{cases} P_1 = \frac{1}{4}\cdot P_{in} \\ P_2 = \frac{3}{4}\cdot P_{in} \end{cases}$$

$$P_1 = \frac{1}{2}\frac{V_0^2}{Z_1} = \frac{1}{4}P_{in} \qquad Z_1 = 4Z_0 = 120\Omega$$

$$P_2 = \frac{1}{2}\frac{V_0^2}{Z_2} = \frac{3}{4}P_{in} \qquad Z_2 = 4Z_0/3 = 40\Omega$$

- Verificare

$$Z_{in} = 40\Omega \,||\, 120\Omega = 30\Omega$$

- Transformatoare in sfert de lungime de unda

$$Z_c^i = \sqrt{Z_i Z_L}$$

$$Z_c^1 = \sqrt{Z_1 Z_L} = \sqrt{120\Omega \cdot 30\Omega} = 60\Omega$$

$$Z_c^2 = \sqrt{Z_2 Z_L} = \sqrt{400\Omega \cdot 30\Omega} = 34.64\Omega$$

Problema 1

- Se consideră un circuit în Π, reciproc, format numai din rezistențe. Să se calculeze matricea S a acestui circuit. (2p)

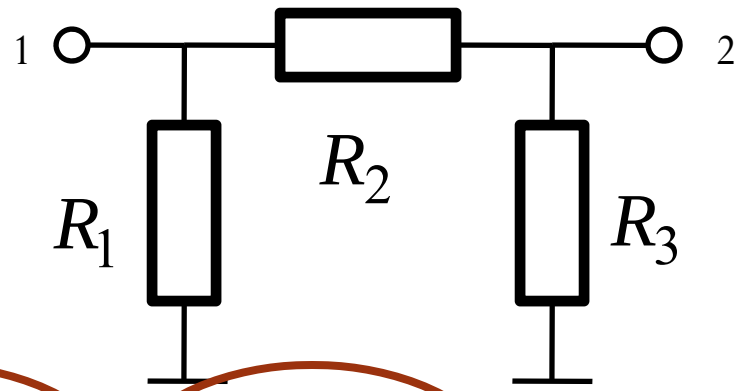

$$Y_{11} = \left.\frac{I_1}{V_1}\right|_{V_2=0} \qquad Y_{21} = \left.\frac{I_2}{V_1}\right|_{V_2=0} \qquad y_{ij} = \frac{Y_{ij}}{Y_0} = Y_{ij} \cdot Z_0$$

$$Z_{11} = \left.\frac{V_1}{I_1}\right|_{I_2=0} \qquad Z_{21} = \left.\frac{V_2}{I_1}\right|_{I_2=0} \qquad z_{ij} = \frac{Z_{ij}}{Z_0}$$

$$S = (1+y)^{-1} \cdot (1-y) \qquad S = (z+1)^{-1} \cdot (z-1)$$

Problema 1

- Definitii tinand cont de notiunile de unda
- unda incidenta nula intr-un port = port terminat pe impedanta de referinta

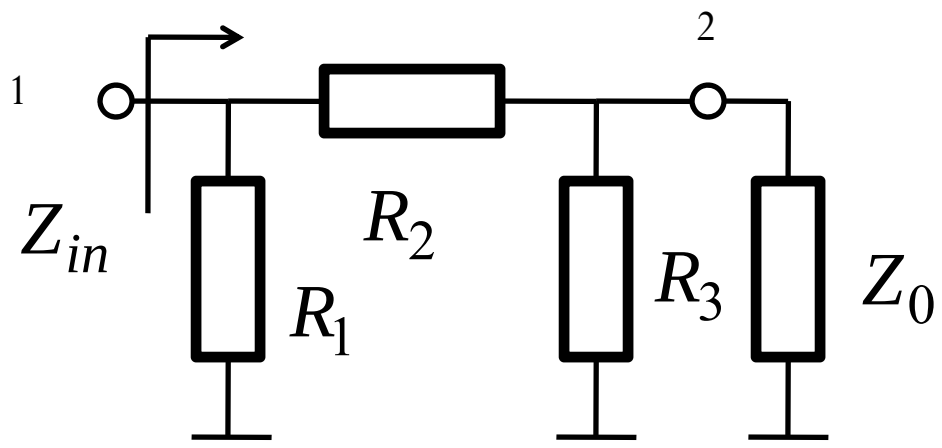

$$S_{11} = \Gamma_{in}\big|_{a_2=0} = \frac{Z_{in} - Z_0}{Z_{in} + Z_0}$$

B Scattering Parameter Relationships

s-parameters in terms of z-parameters	z-parameters in terms of s-parameters
$s_{11} = \frac{(z_{11}-1)(z_{22}+1) - z_{12}z_{21}}{(z_{11}+1)(z_{22}+1) - z_{12}z_{21}}$	$z_{11} = \frac{(1+s_{11})(1-s_{22}) + s_{12}s_{21}}{(1-s_{11})(1-s_{22}) - s_{12}s_{21}}$
$s_{12} = \frac{2z_{12}}{(z_{11}+1)(z_{22}+1) - z_{12}z_{21}}$	$z_{12} = \frac{2s_{12}}{(1-s_{11})(1-s_{22}) - s_{12}s_{21}}$
$s_{21} = \frac{2z_{21}}{(z_{11}+1)(z_{22}+1) - z_{12}z_{21}}$	$z_{21} = \frac{2s_{21}}{(1-s_{11})(1-s_{22}) - s_{12}s_{21}}$
$s_{22} = \frac{(z_{11}+1)(z_{22}-1) - z_{12}z_{21}}{(z_{11}+1)(z_{22}+1) - z_{12}z_{21}}$	$z_{22} = \frac{(1+s_{22})(1-s_{11}) + s_{12}s_{21}}{(1-s_{11})(1-s_{22}) - s_{12}s_{21}}$

B Scattering Parameter Relationships

s-parameters in terms of h-parameters	h-parameters in terms of s-parameters
$s_{11} = \frac{(h_{11}-1)(h_{22}+1)-h_{12}h_{21}}{(h_{11}+1)(h_{22}+1)-h_{12}h_{21}}$	$h_{11} = \frac{(1+s_{11})(1+s_{22})-s_{12}s_{21}}{(1-s_{11})(1+s_{22})+s_{12}s_{21}}$
$s_{12} = \frac{2h_{12}}{(h_{11}+1)(h_{22}+1)-h_{12}h_{21}}$	$h_{12} = \frac{2s_{12}}{(1-s_{11})(1+s_{22})+s_{12}s_{21}}$
$s_{21} = \frac{-2h_{21}}{(h_{11}+1)(h_{22}+1)-h_{12}h_{21}}$	$h_{21} = \frac{-2s_{21}}{(1-s_{11})(1+s_{22})+s_{12}s_{21}}$
$s_{22} = \frac{(1+h_{11})(1-h_{22})+h_{12}h_{21}}{(h_{11}+1)(h_{22}+1)-h_{12}h_{21}}$	$h_{22} = \frac{(1-s_{22})(1-s_{11})-s_{12}s_{21}}{(1-s_{11})(1+s_{22})+s_{12}s_{21}}$

B Scattering Parameter Relationships

s-parameters in terms of y-parameters	y-parameters in terms of s-parameters
$s_{11} = \frac{(1-y_{11})(1+y_{22})+y_{12}y_{21}}{(1+y_{11})(1+y_{22})-y_{12}y_{21}}$	$y_{11} = \frac{(1+s_{22})(1-s_{11})+s_{12}s_{21}}{(1+s_{11})(1+s_{22})-s_{12}s_{21}}$
$s_{12} = \frac{-2y_{12}}{(1+y_{11})(1+y_{22})-y_{12}y_{21}}$	$y_{12} = \frac{-2s_{12}}{(1+s_{11})(1+s_{22})-s_{12}s_{21}}$
$s_{21} = \frac{-2y_{21}}{(1+y_{11})(1+y_{22})-y_{12}y_{21}}$	$y_{21} = \frac{-2s_{21}}{(1+s_{11})(1+s_{22})-s_{12}s_{21}}$
$s_{22} = \frac{(1+y_{11})(1-y_{22})+y_{12}y_{21}}{(1+y_{11})(1+y_{22})-y_{12}y_{21}}$	$y_{22} = \frac{(1+s_{11})(1-s_{22})+s_{12}s_{21}}{(1+s_{11})(1+s_{22})-s_{12}s_{21}}$

B Scattering Parameter Relationships

The h–, y–, and z–parameters listed in previous tables are all normalized to Z_0. If h′, y′, z′ are the actual parameters, then:		
$z'_{11} = z_{11}Z_0$	$y'_{11} = y_{11} / Z_0$	$h'_{11} = h_{11}Z_0$
$z'_{12} = z_{12}Z_0$	$y'_{12} = y_{12} / Z_0$	$h'_{12} = h_{12}$
$z'_{21} = z_{21}Z_0$	$y'_{21} = y_{21} / Z_0$	$h'_{21} = h_{21}$
$z'_{22} = z_{22}Z_0$	$y'_{22} = y_{22} / Z_0$	$h'_{22} = h_{22} / Z_0$

Parameter Normalization
The various scattering parameters are all normalized by the reference impedance, Z_0. This impedance is usually the characteristic impedance of the transmission line in which the network of interest is embedded. Normalizing the scattering parameters makes the Smith Chart readily applicable to transmission lines of any impedance. In addition, impedance and admittance values can be plotted on the same chart.

Problema 3

- Calculați parametrii S pentru un TEC unilateral, la frecvența de 5 GHz, folosind modelul de transistor cu următorii parametri: $R_i = 7\Omega$ $R_{ds} = 400\Omega$ $C_{gs} = 0.3\,pF$ $g_m = 30mS$ (3p)

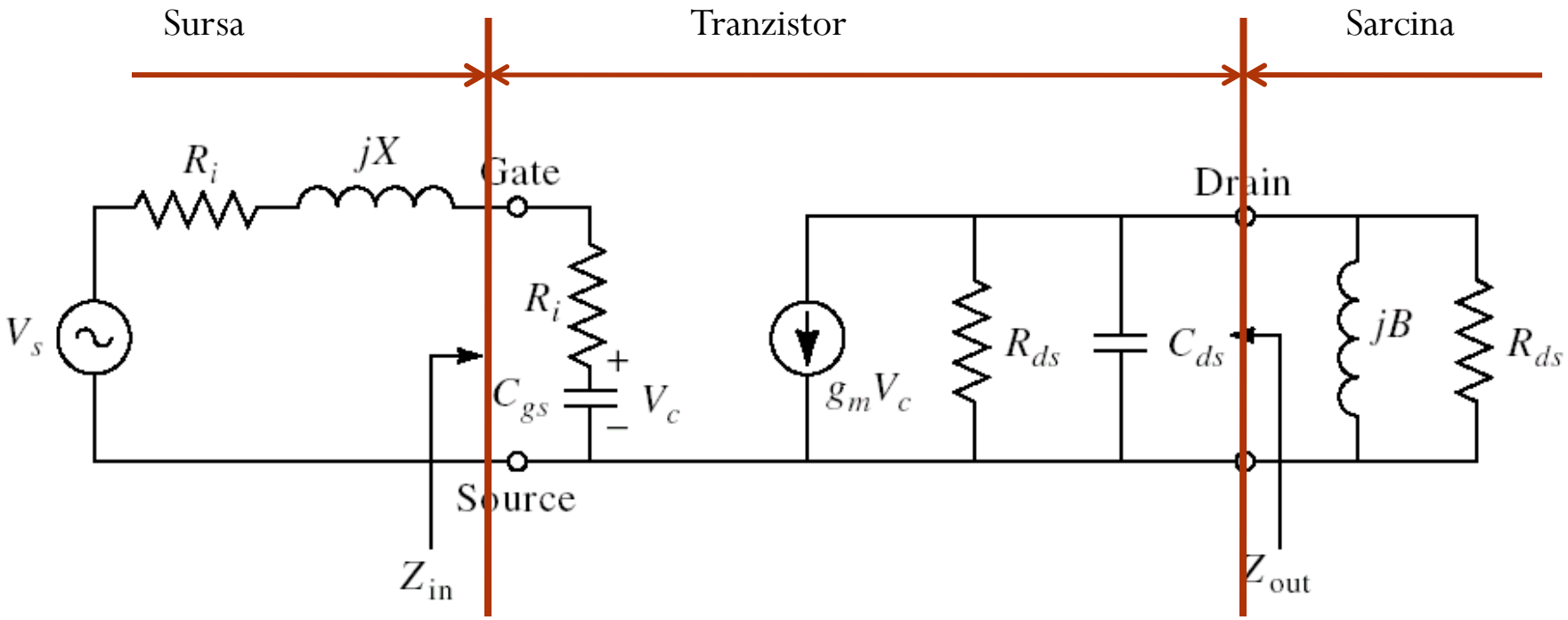

Rezolvare Mathcad

$Ri := 7\Omega \quad Rds := 400\Omega \quad Cgs := 0.3pF \quad gmm := 30 \cdot 10^{-3} S \quad \omega := 2 \cdot \pi \cdot 5 \cdot GHz$

$$y11 := \frac{50\Omega}{Ri + \frac{1}{i \cdot \omega \cdot Cgs}} \qquad y11 = 0.031 + 0.469i$$

$$MY := \begin{pmatrix} y11 & y12 \\ y21 & y22 \end{pmatrix}$$

$$y22 := \frac{50\Omega}{Rds} \qquad y22 = 0.125$$

$$MY = \begin{pmatrix} 0.031 + 0.469i & 0 \\ 1.493 - 0.099i & 0.125 \end{pmatrix}$$

$$y21 := \frac{50\Omega \cdot gmm \cdot \frac{1}{i \cdot \omega \cdot Cgs}}{Ri + \frac{1}{i \cdot \omega \cdot Cgs}} \qquad y21 = 1.493 - 0.099i$$

$$MU := \begin{pmatrix} 1 & 0 \\ 0 & 1 \end{pmatrix}$$

$y12 := 0$

$$MS := (MY + MU)^{-1} \cdot (MU - MY) \qquad MS = \begin{pmatrix} 0.607 - 0.731i & 0 \\ -2.069 + 1.112i & 0.778 \end{pmatrix}$$

Problema 5

- Pentru tranzistorul cu urmatorii parametri S

$$S = \begin{bmatrix} 0.76\angle -21^\circ & 0.011\angle 76^\circ \\ 4.42\angle 159^\circ & 0.64\angle -16^\circ \end{bmatrix}$$

- discutati stabilitatea prin trasarea (calcularea) cercurilor de stabilitate si verificati rezultatul calculand factorul de stabilitate

Rezolvare Mathcad

$$S_{1,1} := 0.76\left(\cos\left(-21\cdot\frac{\pi}{180}\right) + \sin\left(-21\cdot\frac{\pi}{180}\right)i\right) \qquad S_{1,1} = 0.71 - 0.272j$$

$$S_{1,2} := 0.011\left(\cos\left(76\cdot\frac{\pi}{180}\right) + \sin\left(76\cdot\frac{\pi}{180}\right)i\right) \qquad S_{1,2} = 2.661\times 10^{-3} + 0.011j$$

$$S_{2,1} := 4.42\left(\cos\left(159\cdot\frac{\pi}{180}\right) + \sin\left(159\cdot\frac{\pi}{180}\right)i\right) \qquad S_{2,1} = -4.126 + 1.584j$$

$$S_{2,2} := 0.64\left(\cos\left(-16\cdot\frac{\pi}{180}\right) + \sin\left(-16\cdot\frac{\pi}{180}\right)i\right) \qquad S_{2,2} = 0.615 - 0.176j$$

$$S = \begin{pmatrix} 0.71 - 0.272j & 2.661\times 10^{-3} + 0.011j \\ -4.126 + 1.584j & 0.615 - 0.176j \end{pmatrix}$$

$$\Delta := |S| \qquad \Delta = 0.416 - 0.253j$$

Rezolvare Mathcad

Factorul de stabilitate

$$K := \frac{1 + (|\Delta|)^2 - (|S_{1,1}|)^2 - (|S_{2,2}|)^2}{2 \cdot |S_{1,2} \cdot S_{2,1}|} \qquad K = 2.572$$

Cercuri de stabilitate

intrare

$$\Omega L := \frac{\overline{\left(S_{2,2} - \Delta \cdot \overline{S_{1,1}}\right)}}{(|S_{2,2}|)^2 - (|\Delta|)^2} \qquad \Omega L = 1.456 + 0.641j \qquad |\Omega L| = 1.591$$

$$RL := \frac{|S_{1,2} \cdot S_{2,1}|}{\left|(|S_{2,2}|)^2 - (|\Delta|)^2\right|} \qquad RL = 0.282$$

$$|\Omega_L| - R_L > 1$$

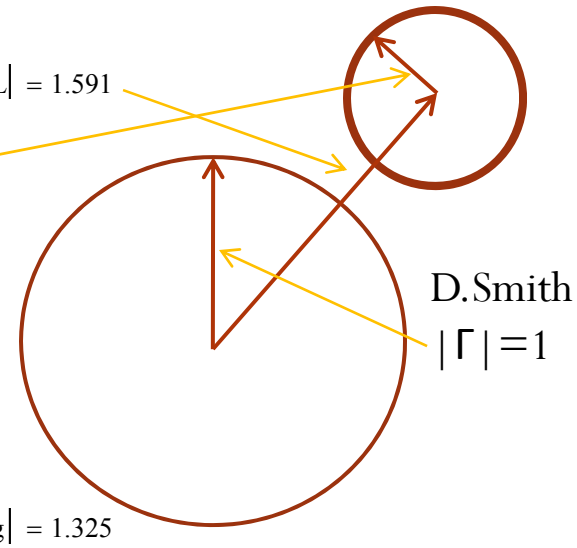

iesire

$$\Omega g := \frac{\overline{\left(S_{1,1} - \Delta \cdot \overline{S_{2,2}}\right)}}{(|S_{1,1}|)^2 - (|\Delta|)^2} \qquad \Omega g = 1.201 + 0.559j \qquad |\Omega g| = 1.325$$

$$Rg := \frac{|S_{1,2} \cdot S_{2,1}|}{\left|(|S_{1,1}|)^2 - (|\Delta|)^2\right|} \qquad Rg = 0.143$$

$$|S_{2,2}| = 0.64$$