1- Utilizarea parametrilor S

Utilizarea parametrilor S

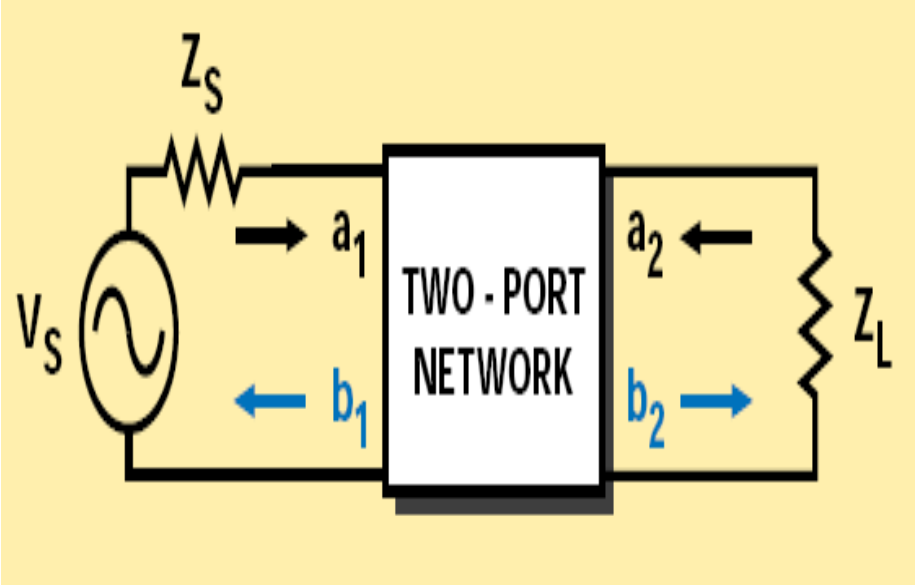

$$a_1 = \frac{V_1 + I_1 Z_0}{2\sqrt{Z_0}} = \frac{\text{voltage wave incident on port 1}}{\sqrt{Z_0}} = \frac{V_{i1}}{\sqrt{Z_0}}$$

$$b_1 = \frac{V_1 - I_1 Z_0}{2\sqrt{Z_0}} = \frac{\text{voltage wave reflected from port 1}}{\sqrt{Z_0}} = \frac{V_{r1}}{\sqrt{Z_0}}$$

$$a_2 = \frac{V_2 + I_2 Z_0}{2\sqrt{Z_0}} = \frac{\text{voltage wave incident on port 2}}{\sqrt{Z_0}} = \frac{V_{i2}}{\sqrt{Z_0}}$$

$$b_2 = \frac{V_2 - I_2 Z_0}{2\sqrt{Z_0}} = \frac{\text{voltage wave reflected from port 2}}{\sqrt{Z_0}} = \frac{V_{r2}}{\sqrt{Z_0}}$$

Utilizarea parametrilor S

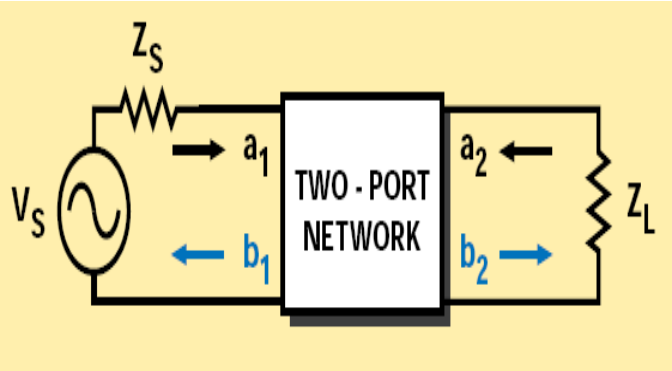

$$b_1 = s_{11} a_1 + s_{12} a_2 \quad (10)$$

$$b_2 = s_{21} a_1 + s_{22} a_2 \quad (11)$$

$$s_{11} = \left.\frac{b_1}{a_1}\right|_{a_2=0} = \text{Input reflection coefficient with the output port terminated by a matched load } (Z_L = Z_0 \text{ sets } a_2 = 0) \quad (12)$$

$$s_{22} = \left.\frac{b_2}{a_2}\right|_{a_1=0} = \text{Output reflection coefficient with the input terminated by a matched load } (Z_S = Z_0 \text{ sets } V_s = 0) \quad (13)$$

$$s_{21} = \left.\frac{b_2}{a_1}\right|_{a_2=0} = \text{Forward transmission (insertion) gain with the output port terminated in a matched load.} \quad (14)$$

$$s_{12} = \left.\frac{b_1}{a_2}\right|_{a_1=0} = \text{Reverse transmission (insertion) gain with the input port terminated in a matched load.} \quad (15)$$

Utilizarea parametrilor S

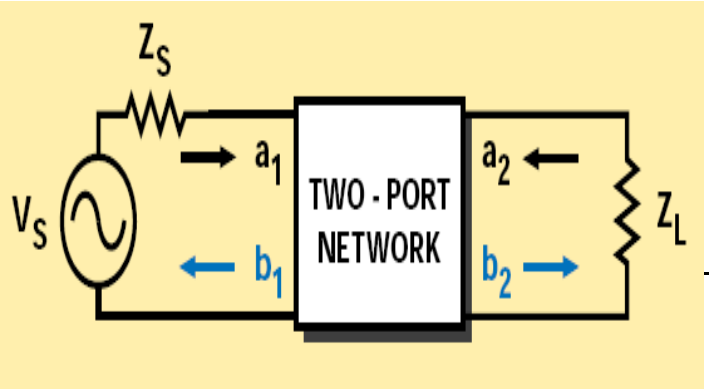

$|a_1|^2$ = Power incident on the input of the network.
= Power available from a source impedance Z_0.

$|a_2|^2$ = Power incident on the output of the network.
= Power reflected from the load.

$|b_1|^2$ = Power reflected from the input port of the network.
= Power available from a Z_0 source minus the power delivered to the input of the network.

$|b_2|^2$ = Power reflected from the output port of the network.
= Power incident on the load.
= Power that would be delivered to a Z_0 load.

Utilizarea parametrilor S

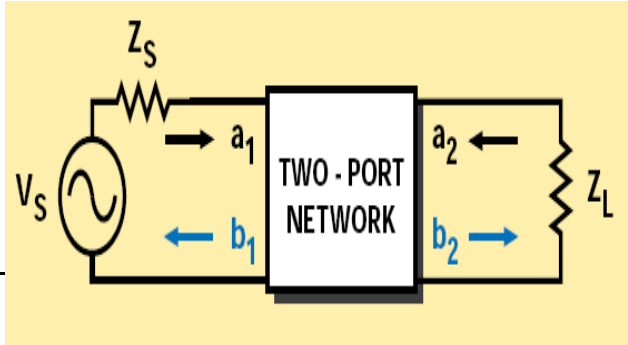

$$|s_{11}|^2 = \frac{\text{Power reflected from the network input}}{\text{Power incident on the network input}}$$

$$|s_{22}|^2 = \frac{\text{Power reflected from the network output}}{\text{Power incident on the network output}}$$

$$|s_{21}|^2 = \frac{\text{Power delivered to a } Z_0 \text{ load}}{\text{Power available from } Z_0 \text{ source}}$$

$$= \text{Transducer power gain with } Z_0 \text{ load and source}$$

$$|s_{12}|^2 = \text{Reverse transducer power gain with } Z_0 \text{ load and source}$$

EXEMPLU

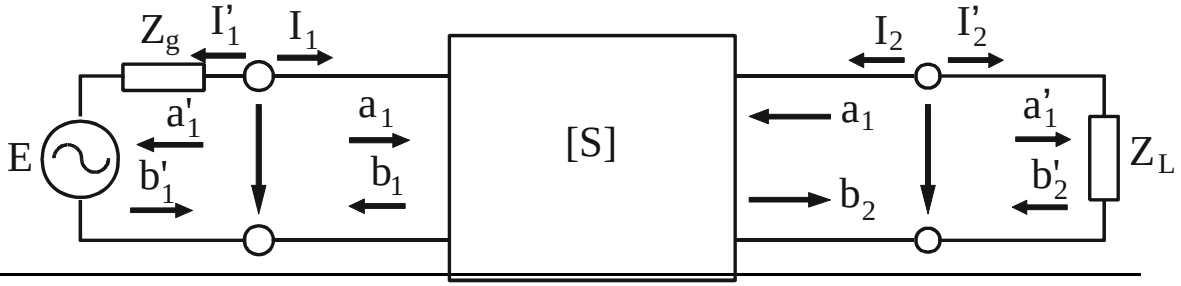

$$a_1 = \Gamma_g b_1 + \frac{\sqrt{R_0}}{Z_g + R_0} E$$

$$\boxed{a_1' = \frac{V_1' + R_0 I_1'}{2\sqrt{R_0}} = \frac{V_1 - R_0 I_1}{2\sqrt{R_0}} = b_1}$$

$$\boxed{b_1' = \frac{V_1' - R_0 I_1'}{2\sqrt{R_0}} = \frac{V_1 + R_0 I_1}{2\sqrt{R_0}} = a_1}$$

$$\boxed{b_1' = \frac{V_1' - R_0 I_1'}{2\sqrt{R_0}} \cdot \frac{Z_g + R_0}{Z_g + R_0}}$$

$$\boxed{b_1' = \frac{\left(v_1' + R_0 I_1' - 2R_0 I_1'\right)\left(Z_g - R_0 + 2R_0\right)}{2\sqrt{R_0}\left(Z_g + R_0\right)}}$$

$$\boxed{b_1' = \frac{\left(V_1' + R_0 I_1'\right)\left(Z_g - R_0\right) - 2R_0 Z_g I_1' + 2R_0 V_1'}{2\sqrt{R_0}\left(Z_g + R_0\right)}}$$

$$\boxed{b_1' = \frac{V_1' + R_0 I_1'}{2\sqrt{R_0}} \cdot \frac{Z_g - R_0}{Z_g + R_0} + \frac{2R_0\left(V_1' - Z_g I_1'\right)}{2\sqrt{R_0}\left(Z_g + R_0\right)}}$$

$$\boxed{b_1' = \Gamma_g a_1' + \frac{\sqrt{R_0}}{Z_g + R_0} E}$$

EXEMPLU

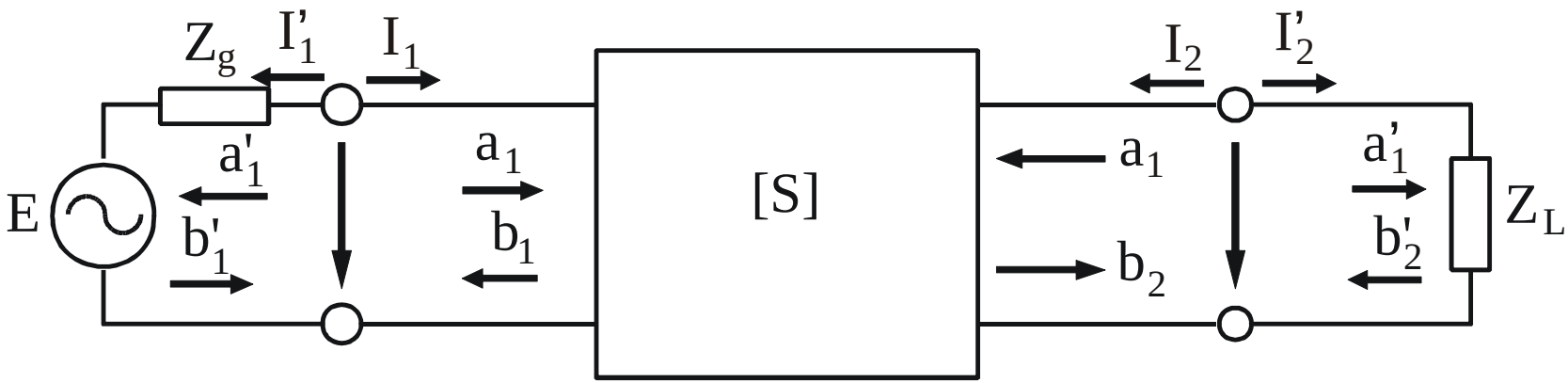

$$s'_{11} = \frac{b_1}{a_1} = \frac{s_{11}(1 - s_{22}\Gamma_L) + s_{21}s_{12}\Gamma_L}{1 - s_{22}\Gamma_L}$$

$$= s_{11} + \frac{s_{21}s_{12}\Gamma_L}{1 - s_{22}\Gamma_L}$$

B Scattering Parameter Relationships

s-parameters in terms of z-parameters	z-parameters in terms of s-parameters
$s_{11} = \frac{(z_{11}-1)(z_{22}+1)-z_{12}z_{21}}{(z_{11}+1)(z_{22}+1)-z_{12}z_{21}}$	$z_{11} = \frac{(1+s_{11})(1-s_{22})+s_{12}s_{21}}{(1-s_{11})(1-s_{22})-s_{12}s_{21}}$
$s_{12} = \frac{2z_{12}}{(z_{11}+1)(z_{22}+1)-z_{12}z_{21}}$	$z_{12} = \frac{2s_{12}}{(1-s_{11})(1-s_{22})-s_{12}s_{21}}$
$s_{21} = \frac{2z_{21}}{(z_{11}+1)(z_{22}+1)-z_{12}z_{21}}$	$z_{21} = \frac{2s_{21}}{(1-s_{11})(1-s_{22})-s_{12}s_{21}}$
$s_{22} = \frac{(z_{11}+1)(z_{22}-1)-z_{12}z_{21}}{(z_{11}+1)(z_{22}+1)-z_{12}z_{21}}$	$z_{22} = \frac{(1+s_{22})(1-s_{11})+s_{12}s_{21}}{(1-s_{11})(1-s_{22})-s_{12}s_{21}}$

S Z

B Scattering Parameter Relationships

s-parameters in terms of h-parameters	h-parameters in terms of s-parameters
$s_{11} = \frac{(h_{11}-1)(h_{22}+1)-h_{12}h_{21}}{(h_{11}+1)(h_{22}+1)-h_{12}h_{21}}$	$h_{11} = \frac{(1+s_{11})(1+s_{22})-s_{12}s_{21}}{(1-s_{11})(1+s_{22})+s_{12}s_{21}}$
$s_{12} = \frac{2h_{12}}{(h_{11}+1)(h_{22}+1)-h_{12}h_{21}}$	$h_{12} = \frac{2s_{12}}{(1-s_{11})(1+s_{22})+s_{12}s_{21}}$
$s_{21} = \frac{-2h_{21}}{(h_{11}+1)(h_{22}+1)-h_{12}h_{21}}$	$h_{21} = \frac{-2s_{21}}{(1-s_{11})(1+s_{22})+s_{12}s_{21}}$
$s_{22} = \frac{(1+h_{11})(1-h_{22})+h_{12}h_{21}}{(h_{11}+1)(h_{22}+1)-h_{12}h_{21}}$	$h_{22} = \frac{(1-s_{22})(1-s_{11})-s_{12}s_{21}}{(1-s_{11})(1+s_{22})+s_{12}s_{21}}$

B Scattering Parameter Relationships

s-parameters in terms of y-parameters	y-parameters in terms of s-parameters
$s_{11} = \frac{(1-y_{11})(1+y_{22})+y_{12}y_{21}}{(1+y_{11})(1+y_{22})-y_{12}y_{21}}$	$y_{11} = \frac{(1+s_{22})(1-s_{11})+s_{12}s_{21}}{(1+s_{11})(1+s_{22})-s_{12}s_{21}}$
$s_{12} = \frac{-2y_{12}}{(1+y_{11})(1+y_{22})-y_{12}y_{21}}$	$y_{12} = \frac{-2s_{12}}{(1+s_{11})(1+s_{22})-s_{12}s_{21}}$
$s_{21} = \frac{-2y_{21}}{(1+y_{11})(1+y_{22})-y_{12}y_{21}}$	$y_{21} = \frac{-2s_{21}}{(1+s_{11})(1+s_{22})-s_{12}s_{21}}$
$s_{22} = \frac{(1+y_{11})(1-y_{22})+y_{12}y_{21}}{(1+y_{11})(1+y_{22})-y_{12}y_{21}}$	$y_{22} = \frac{(1+s_{11})(1-s_{22})+s_{12}s_{21}}{(1+s_{11})(1+s_{22})-s_{12}s_{21}}$

B Scattering Parameter Relationships

The h–, y–, and z–parameters listed in previous tables are all normalized to Z_0. If h′, y′, z′ are the actual parameters, then:		
$z'_{11} = z_{11}Z_0$	$y'_{11} = y_{11} / Z_0$	$h'_{11} = h_{11}Z_0$
$z'_{12} = z_{12}Z_0$	$y'_{12} = y_{12} / Z_0$	$h'_{12} = h_{12}$
$z'_{21} = z_{21}Z_0$	$y'_{21} = y_{21} / Z_0$	$h'_{21} = h_{21}$
$z'_{22} = z_{22}Z_0$	$y'_{22} = y_{22} / Z_0$	$h'_{22} = h_{22} / Z_0$

Parameter Normalization
The various scattering parameters are all normalized by the reference impedance, Z_0. This impedance is usually the characteristic impedance of the transmission line in which the network of interest is embedded. Normalizing the scattering parameters makes the Smith Chart readily applicable to transmission lines of any impedance. In addition, impedance and admittance values can be plotted on the same chart.

Legatura dintre parametrii S si parametrii ABCD

$$A = \sqrt{\frac{Z_{01}}{Z_{02}}}\,\frac{\left(1+S_{11}-S_{22}-\Delta S\right)}{2S_{21}}$$

$$B = \sqrt{Z_{01}Z_{02}}\,\frac{\left(1+S_{11}+S_{22}+\Delta S\right)}{2S_{21}}$$

$$C = \frac{1}{\sqrt{Z_{01}Z_{02}}}\,\frac{1-S_{11}-S_{22}+\Delta S}{2S_{21}}$$

$$D = \sqrt{\frac{Z_{02}}{Z_{01}}}\,\frac{1-S_{11}+S_{22}-\Delta S}{2S_{21}}$$

$$\Delta S = S_{11}S_{22} - S_{12}S_{21}$$

$$S_{11} = \frac{AZ_{02}+B-CZ_{01}Z_{02}-DZ_{01}}{AZ_{02}+B+CZ_{01}Z_{02}+DZ_{01}}$$

$$S_{12} = \frac{2(AD-BC)\sqrt{Z_{01}Z_{02}}}{AZ_{02}+B+CZ_{01}Z_{02}+DZ_{01}}$$

$$S_{21} = \frac{2\sqrt{Z_{01}Z_{02}}}{AZ_{02}+B+CZ_{01}Z_{02}+DZ_{01}}$$

$$S_{22} = \frac{-AZ_{02}+B-CZ_{01}Z_{02}+DZ_{01}}{AZ_{02}+B+CZ_{01}Z_{02}+DZ_{01}}$$

Matricea ABCD a unei linii de transmisiune

$$\begin{bmatrix} V_E \\ I_E \end{bmatrix} = \begin{bmatrix} ch(\gamma l) & Z_c sh(\gamma l) \\ \dfrac{sh(\gamma l)}{Z_c} & ch(\gamma l) \end{bmatrix} \cdot \begin{bmatrix} V_O \\ I_O \end{bmatrix} \Leftrightarrow \begin{bmatrix} V_O \\ I_O \end{bmatrix} = \begin{bmatrix} ch(\gamma l) & -Z_c sh(\gamma l) \\ -\dfrac{sh(\gamma l)}{Z_c} & ch(\gamma l) \end{bmatrix} \cdot \begin{bmatrix} V_E \\ I_E \end{bmatrix}$$

$$\begin{bmatrix} V_E \\ I_E \end{bmatrix} = \begin{bmatrix} \cos(\beta l) & jZ_c \sin(\beta l) \\ \dfrac{j\sin(\beta l)}{Z_c} & \cos(\beta l) \end{bmatrix} \cdot \begin{bmatrix} V_O \\ I_O \end{bmatrix}, \; Z_E = Z_c \frac{Z_O + jZ_c tg(\beta l)}{Z_c + jZ_O tg(\beta l)}$$

Matricea Y pentru doua linii cuplate

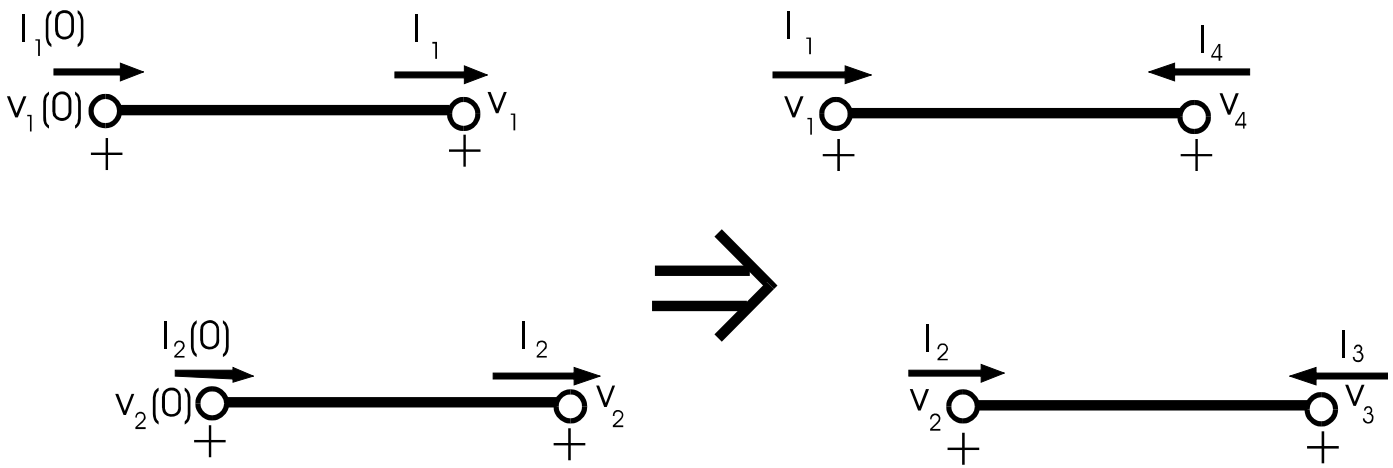

$$\begin{bmatrix} I_1 \\ I_2 \\ I_3 \\ I_4 \end{bmatrix} = \begin{bmatrix} Y_c^+ \coth(\gamma z) & Y_c^- \coth(\gamma z) & -\dfrac{Y_c^-}{\mathrm{sh}(\gamma z)} & -\dfrac{Y_c^+}{\mathrm{sh}(\gamma z)} \\ Y_c^- \coth(\gamma z) & Y_c^+ \coth(\gamma z) & -\dfrac{Y_c^+}{\mathrm{sh}(\gamma z)} & -\dfrac{Y_c^-}{\mathrm{sh}(\gamma z)} \\ -\dfrac{Y_c^-}{\mathrm{sh}(\gamma z)} & -\dfrac{Y_c^+}{\mathrm{sh}(\gamma z)} & Y_c^+ \coth(\gamma z) & Y_c^- \coth(\gamma z) \\ -\dfrac{Y_c^+}{\mathrm{sh}(\gamma z)} & -\dfrac{Y_c^-}{\mathrm{sh}(\gamma z)} & Y_c^- \coth(\gamma z) & Y_c^+ \coth(\gamma z) \end{bmatrix} \cdot \begin{bmatrix} V_1 \\ V_2 \\ V_3 \\ V_4 \end{bmatrix}$$

$$Y_c^- = \frac{Y_{ce} - Y_{co}}{2}$$

$$\left(Y_c^+\right)^2 - \left(Y_c^-\right)^2 = 2 Y_{ce} Y_{co}$$