Laboratory 4 (w9-10)

2021/2022

Microwave Devices and Circuits

Short theory

Reflection and power / Model

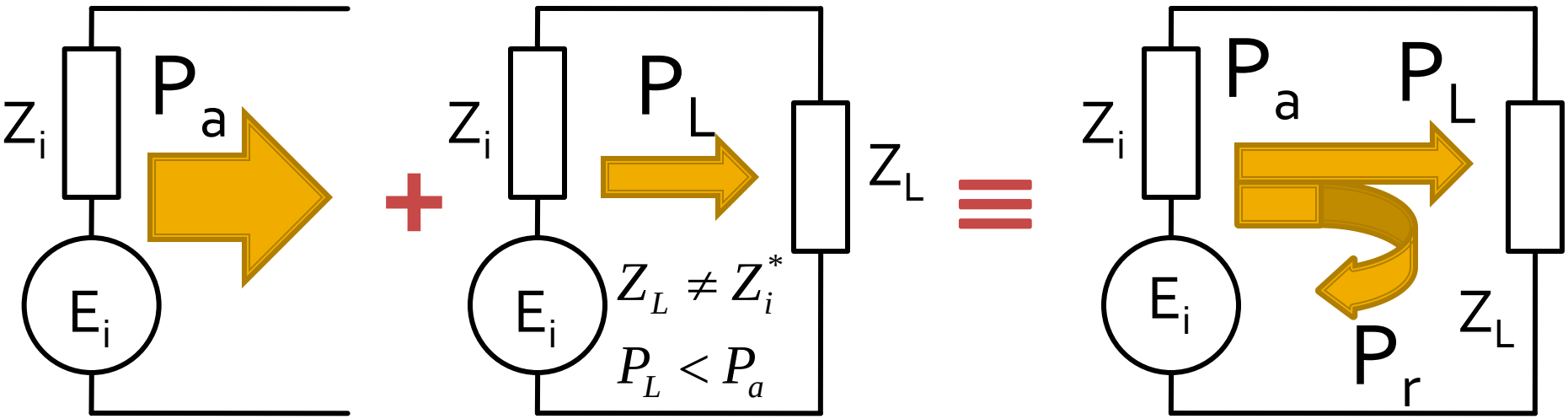

- The source has the ability to sent to the load a certain maximum power (available power) P_a
- For a particular load the power sent to the load is less than the maximum (mismatch) $P_L < P_a$
- The phenomenon is **"as if"** (model) some of the power is reflected $P_r = P_a - P_L$
- The power is a **scalar !**

Power / Matching

- Two ports in which matching influences the power transfer

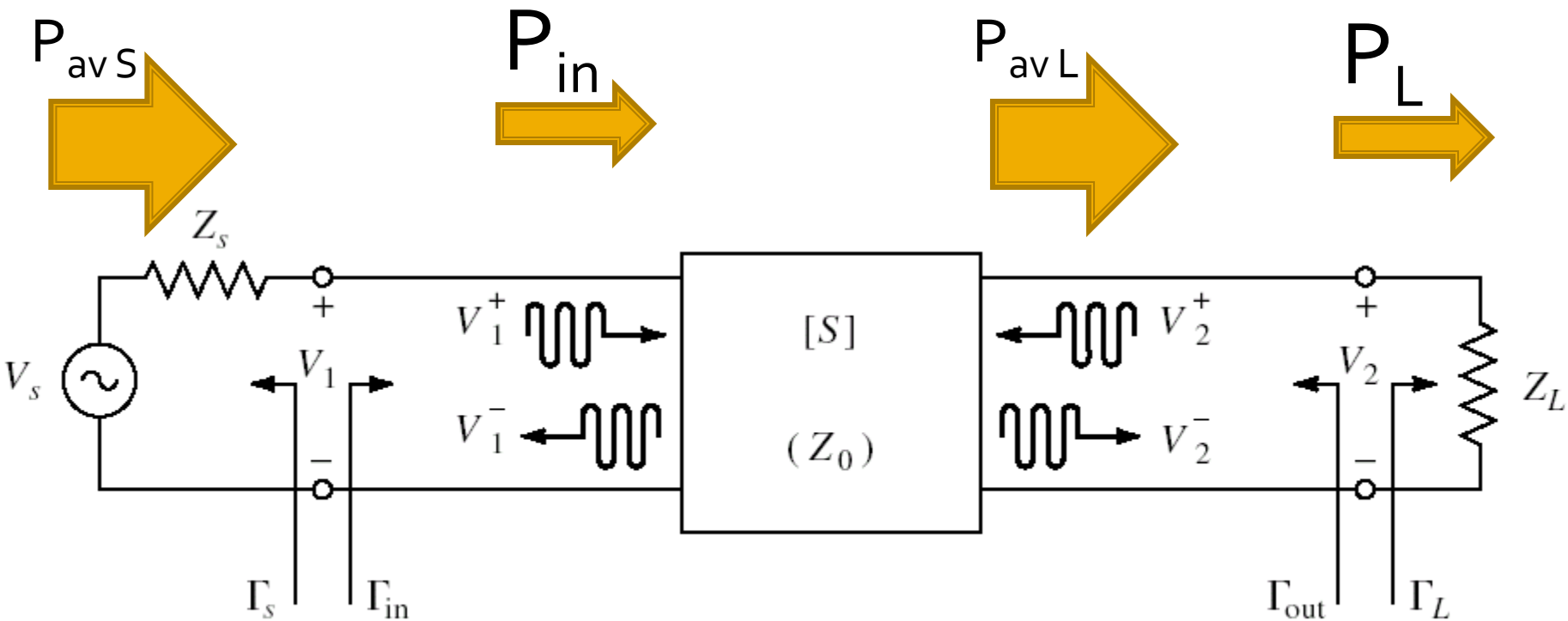

Amplifier as two-port

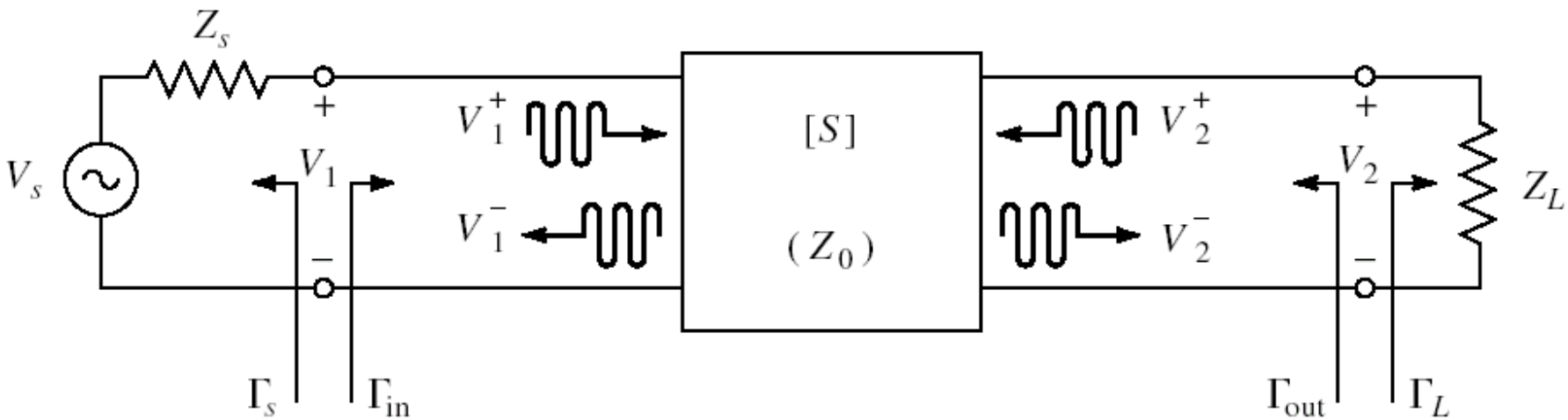

- Charaterized with S parameters
- normalized at Zo (implicit 50Ω)
- Datasheets: S parameters for specific bias conditions

S parameters

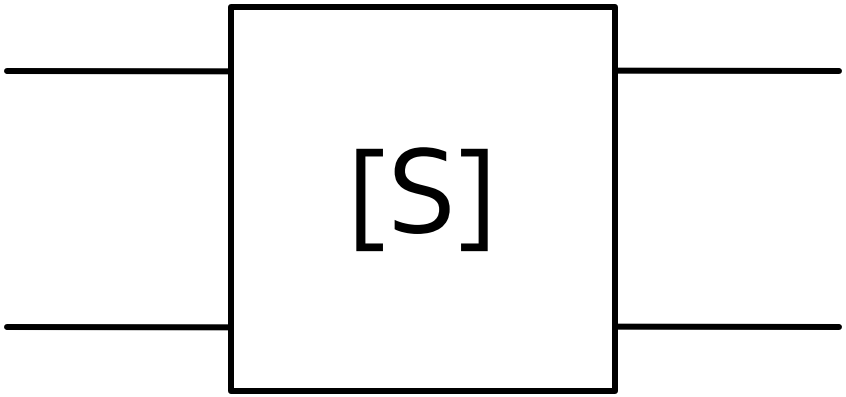

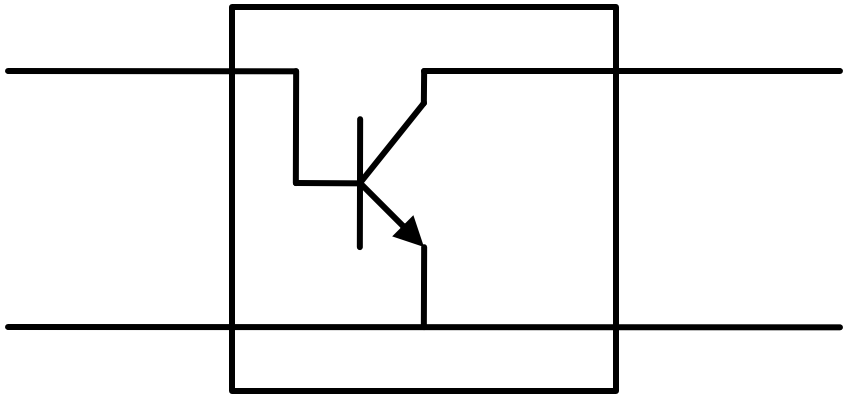

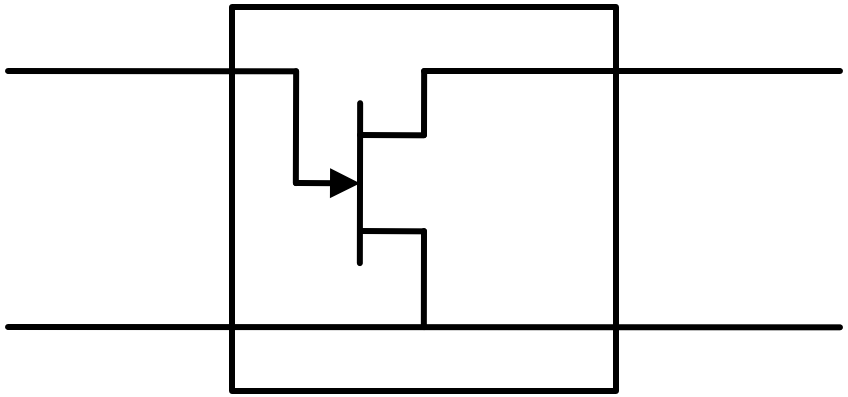

Amplifier as two-port

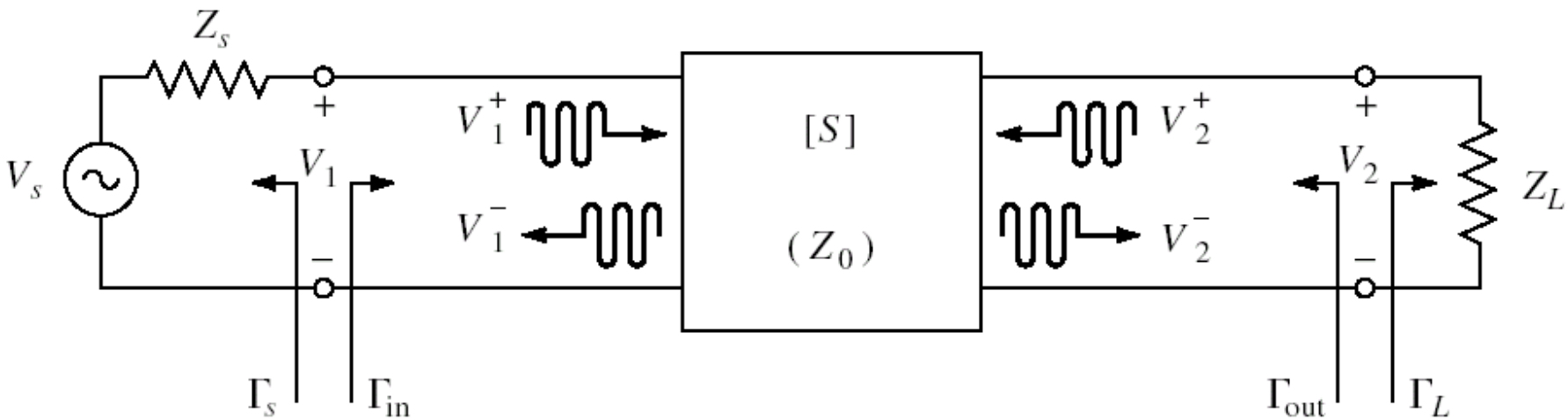

- For an amplifier two-port we are interested in:
  - **stability**
  - power gain
  - noise (sometimes – small signals)
  - linearity (sometimes – large signals)

Stability

$$|\Gamma_{in}| < 1 \qquad \left| S_{11} + \frac{S_{12} \cdot S_{21} \cdot \Gamma_L}{1 - S_{22} \cdot \Gamma_L} \right| < 1$$

- We can calculate conditions to be met by Γ_L to achieve stability

$$|\Gamma_{out}| < 1 \qquad \left| S_{22} + \frac{S_{12} \cdot S_{21} \cdot \Gamma_S}{1 - S_{11} \cdot \Gamma_S} \right| < 1$$

- We can calculate conditions to be met by Γ_S to achieve stability

Output stability circle (CSOUT)

$$\left|\Gamma_L - \frac{\left(S_{22} - \Delta \cdot S_{11}^*\right)^*}{|S_{22}|^2 - |\Delta|^2}\right| = \left|\frac{S_{12} \cdot S_{21}}{|S_{22}|^2 - |\Delta|^2}\right| \qquad |\Gamma_L - C_L| = R_L$$

- We obtain the equation of a circle in the complex plane, which represents the locus of Γ_L for the **limit between stability and instability** ($|\Gamma_{in}| = 1$)
- This circle is the **output stability circle** (Γ_L)

$$C_L = \frac{\left(S_{22} - \Delta \cdot S_{11}^*\right)^*}{|S_{22}|^2 - |\Delta|^2} \qquad R_L = \frac{|S_{12} \cdot S_{21}|}{\left||S_{22}|^2 - |\Delta|^2\right|}$$

Input stability circle (CSIN)

- Similarly

$$|\Gamma_{out}| = 1 \qquad \left| S_{22} + \frac{S_{12} \cdot S_{21} \cdot \Gamma_S}{1 - S_{11} \cdot \Gamma_S} \right| = 1$$

- We obtain the equation of a circle in the complex plane, which represents the locus of Γ_S for the **limit between stability and instability** ($|\Gamma_{out}| = 1$)
- This circle is the **input stability circle** (Γ_S)

$$C_S = \frac{\left(S_{11} - \Delta \cdot S_{22}^*\right)^*}{|S_{11}|^2 - |\Delta|^2} \qquad R_S = \frac{|S_{12} \cdot S_{21}|}{\left||S_{11}|^2 - |\Delta|^2\right|}$$

ADS

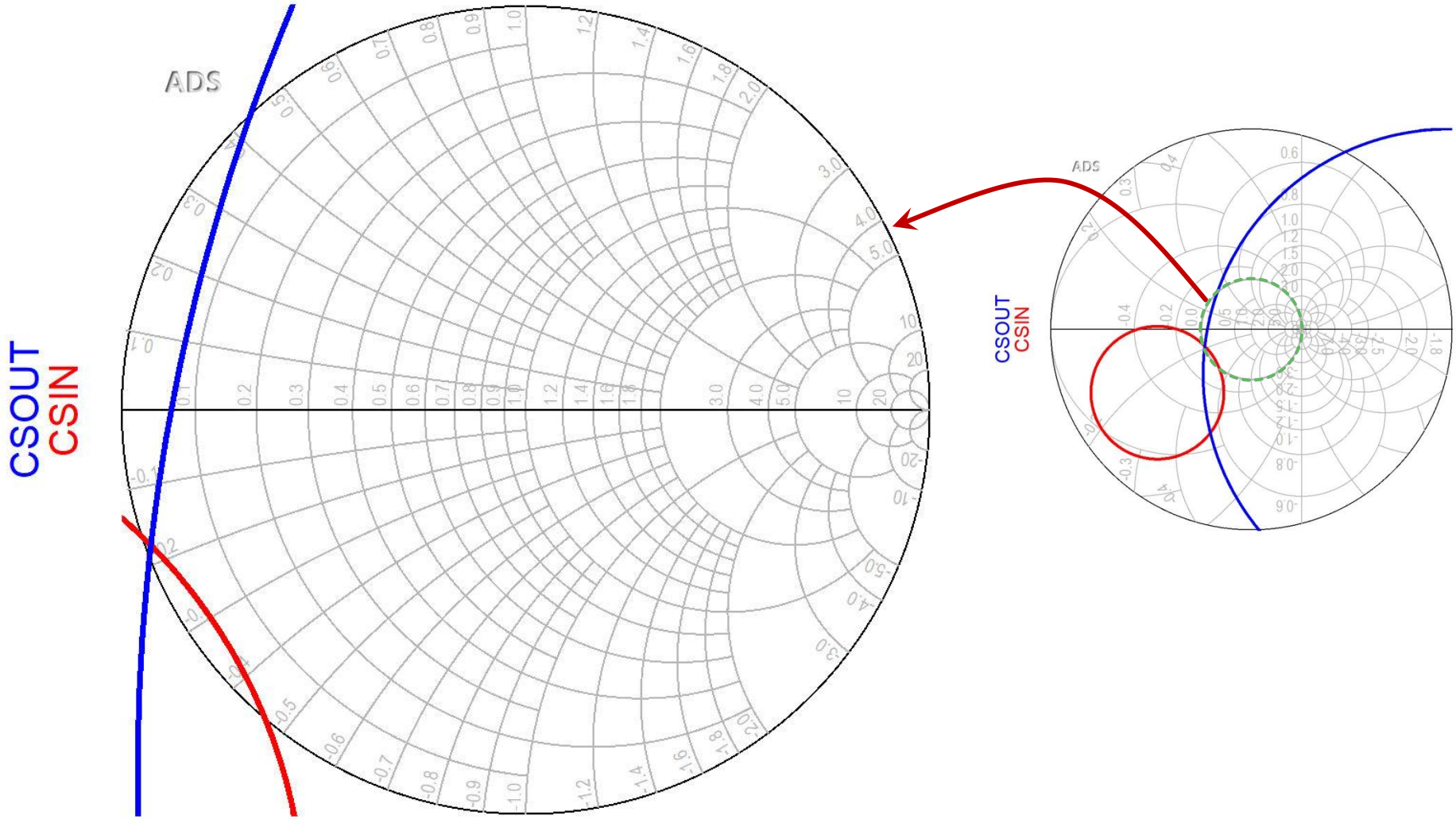

Amplifier as two-port

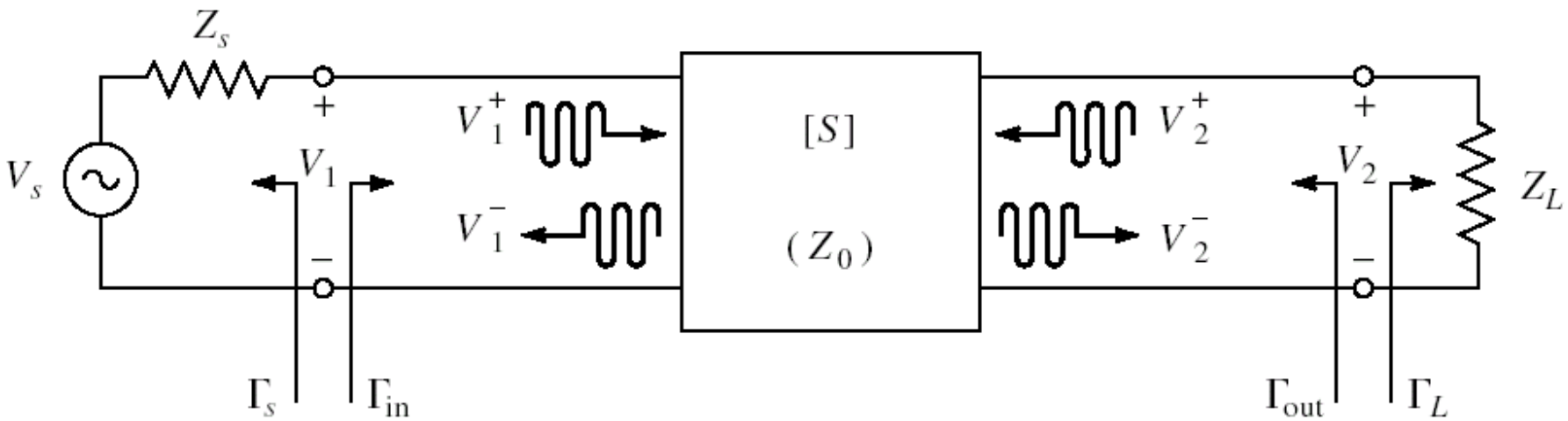

- For an amplifier two-port we are interested in:
  - stability
  - **power gain**
  - noise (sometimes – small signals)
  - linearity (sometimes – large signals)

Design for Specified Gain

- In many cases we need an approach other than "brute force" when we prefer to design for **less than the maximum obtainable gain**, in order to:
  - improve noise behavior ($L_3 + C_9$)
  - improve stability
  - improve VSWR
  - control performance at multiple frequencies
  - improve amplifier's bandwidth

Wide bandwidth amplifier

- Design for maximum gain at two different frequencies creates an frequency unbalanced amplifier

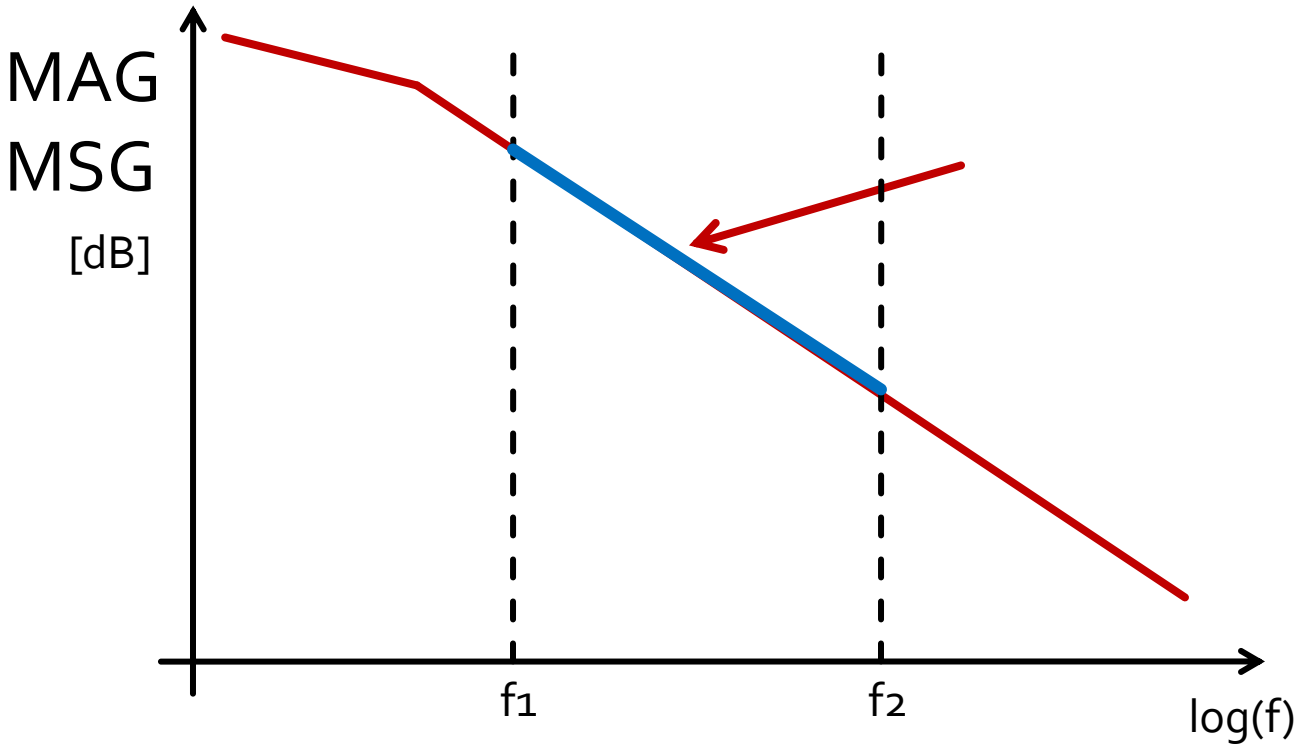

Wide bandwidth amplifier

- Design for maximum gain at highest frequency
- Controlled mismatch at lower frequency
  - eventually at more frequencies inside the bandwidth

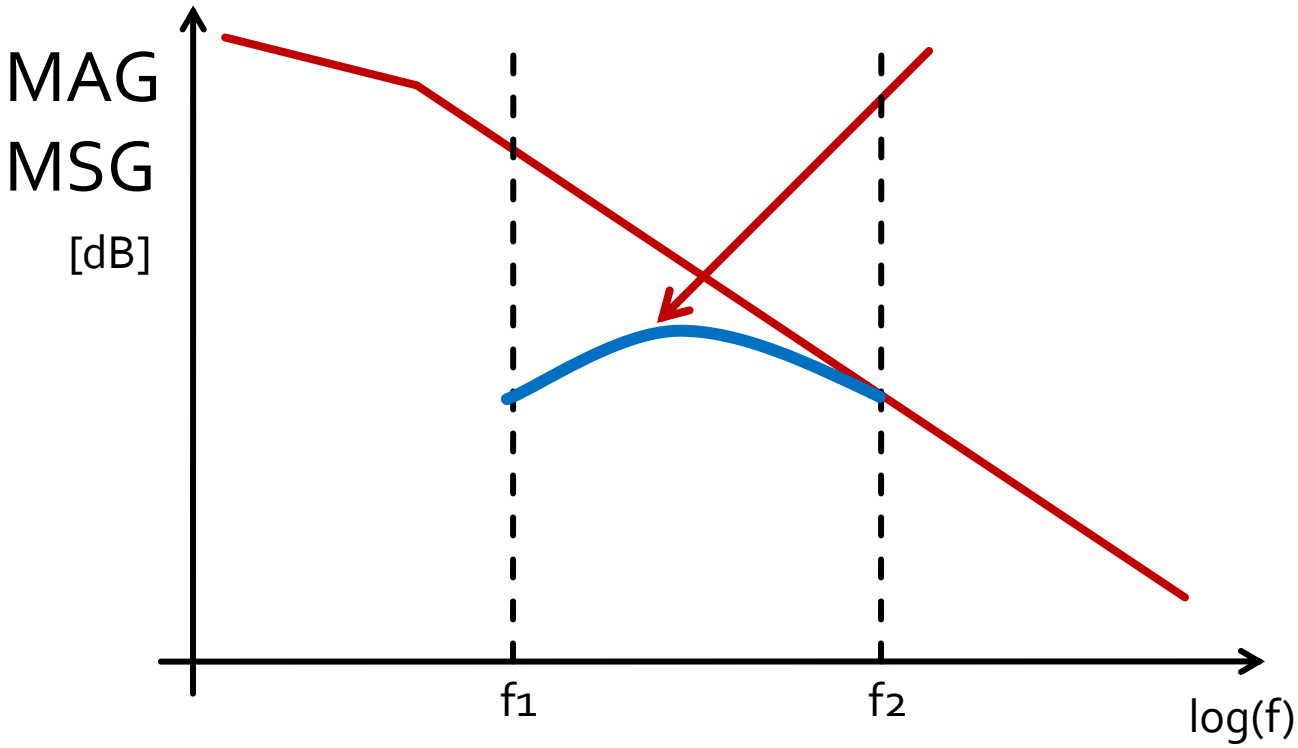

Design for Specified Gain

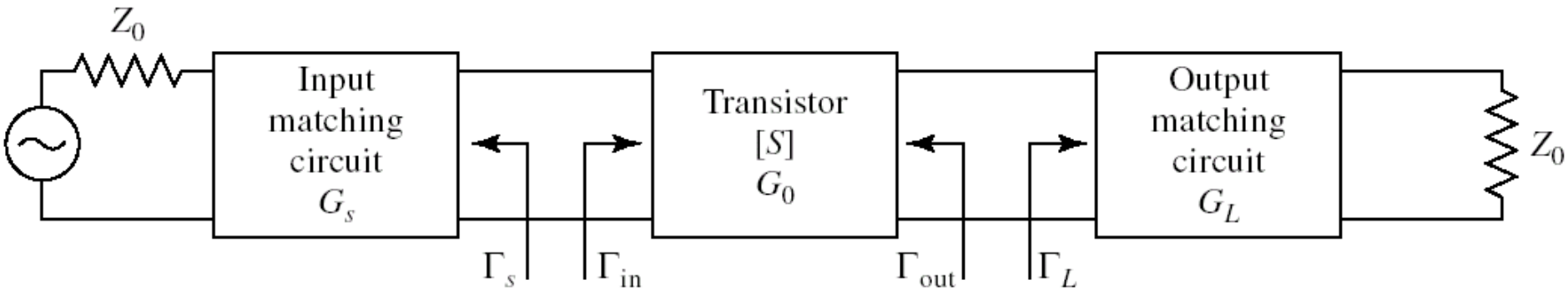

- In the unilateral assumption:

$$G_{TU} = \frac{1-|\Gamma_S|^2}{|1-S_{11}\cdot\Gamma_S|^2}\cdot|S_{21}|^2\cdot\frac{1-|\Gamma_L|^2}{|1-S_{22}\cdot\Gamma_L|^2}$$

$$G_S = \frac{1-|\Gamma_S|^2}{|1-S_{11}\cdot\Gamma_S|^2} \qquad G_0 = |S_{21}|^2 \qquad G_L = \frac{1-|\Gamma_L|^2}{|1-S_{22}\cdot\Gamma_L|^2}$$

$$\boxed{G_S = G_S(\Gamma_S)} \qquad \boxed{G_L = G_L(\Gamma_L)}$$

Design for Specified Gain

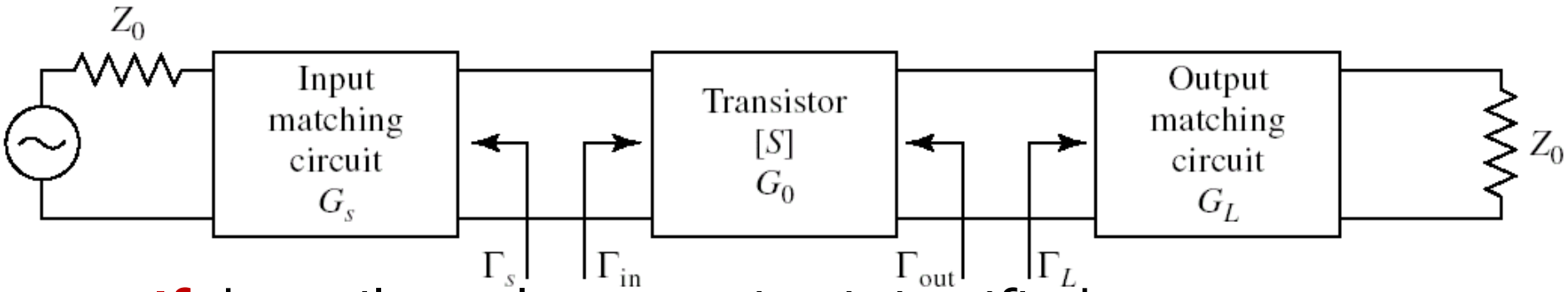

- **If** the unilateral assumption is justified :
  - power gain added by the input matching circuit **is not** influenced by the output matching circuit $G_S = G_S(\Gamma_S)$
  - power gain added by the output matching circuit **is not** influenced by the input matching circuit $G_L = G_L(\Gamma_L)$
- Output /Input match can be designed independently
  - We can impose different demands for input/output
  - Total gain is:

$$G_T = G_S \cdot G_0 \cdot G_L \qquad G_T[dB] = G_S[dB] + G_0[dB] + G_L[dB]$$

$G_S(\Gamma_S)$

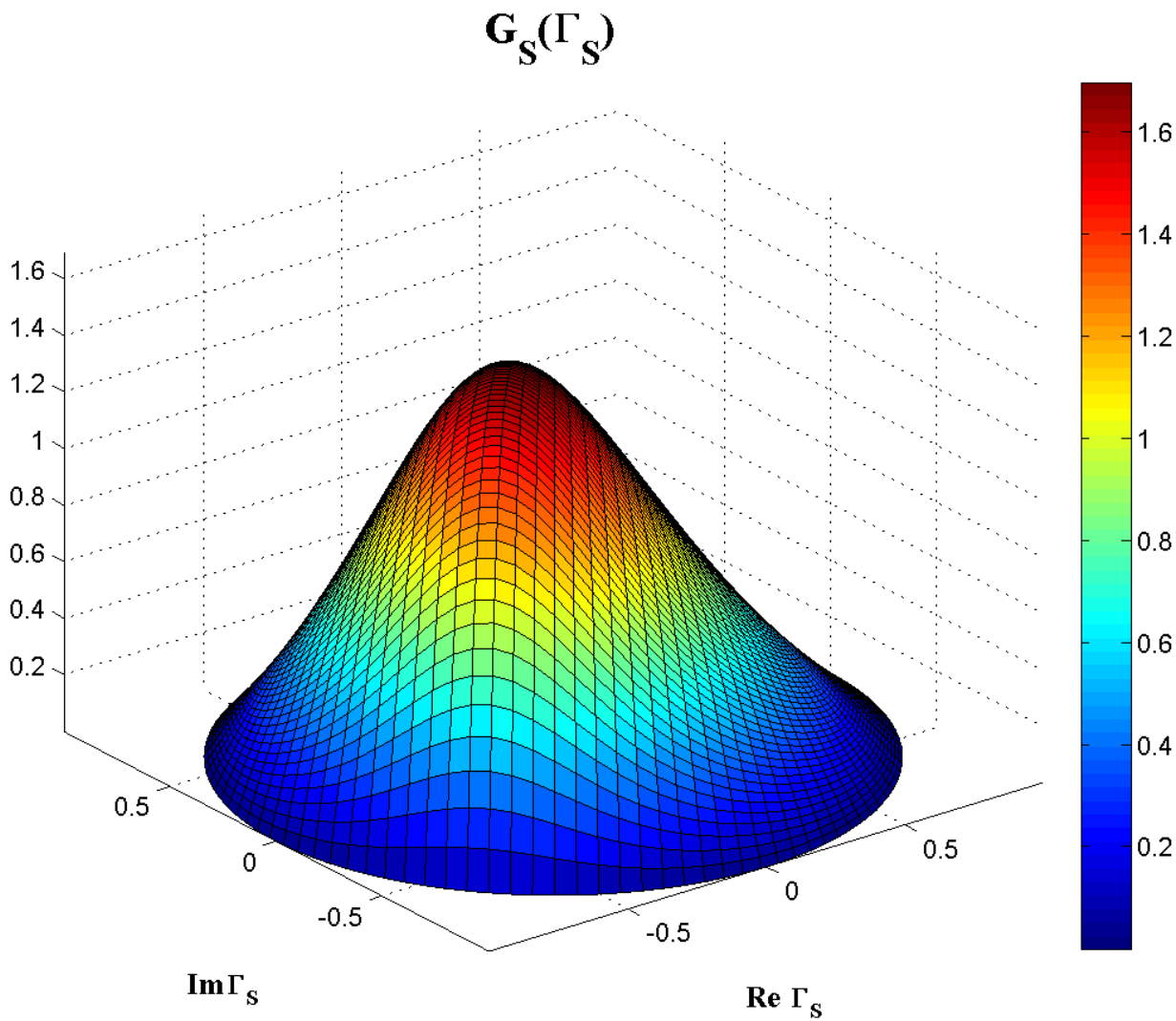

$$G_S = \frac{1-|\Gamma_S|^2}{|1-S_{11}\cdot\Gamma_S|^2}$$

$G_S(\Gamma_S)$, constant value contours

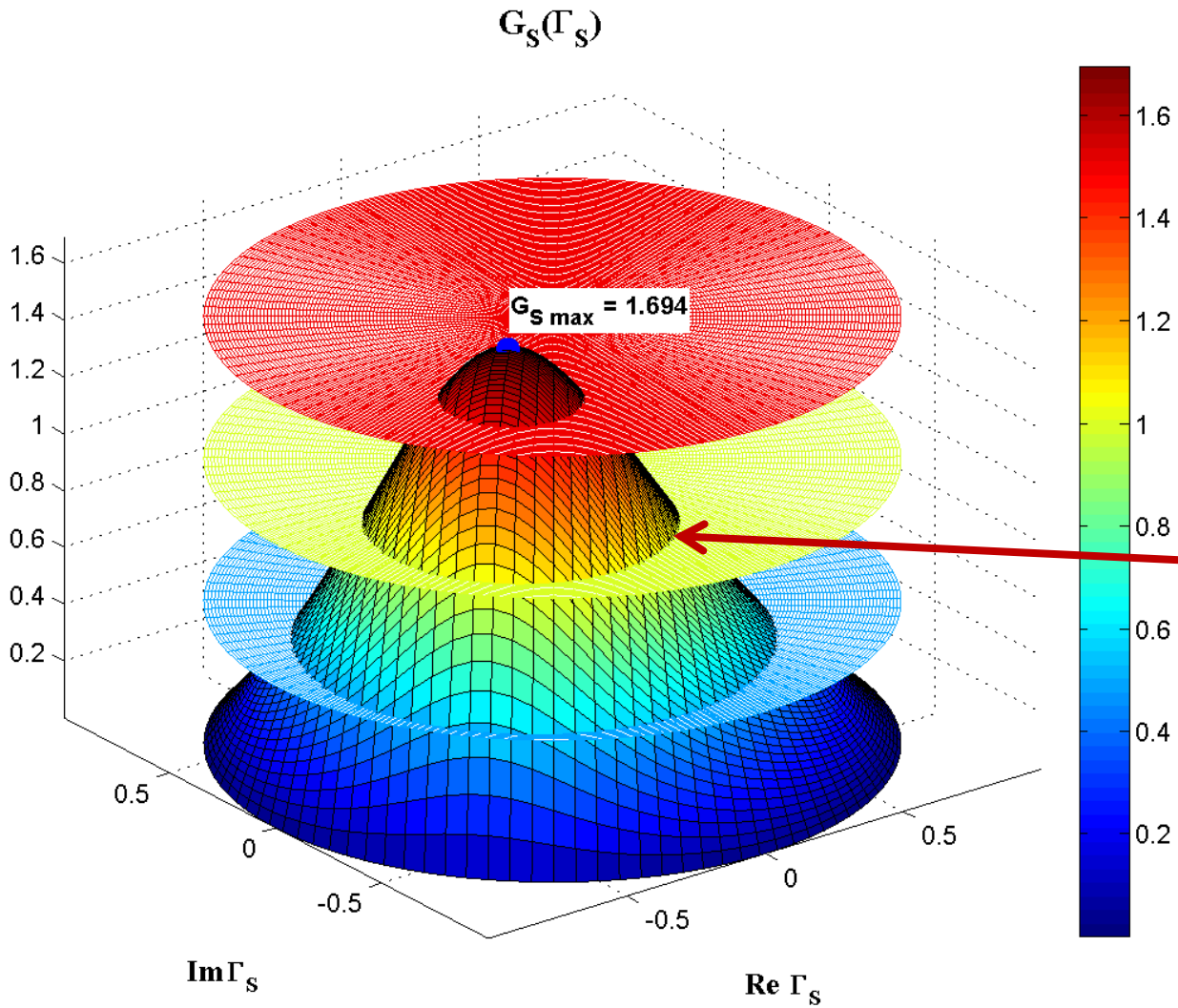

$G_S = 1.5$

$G_S = 1.0$

$G_S = 0.5$

Circles

$G_S(\Gamma_S)$, constant value contours

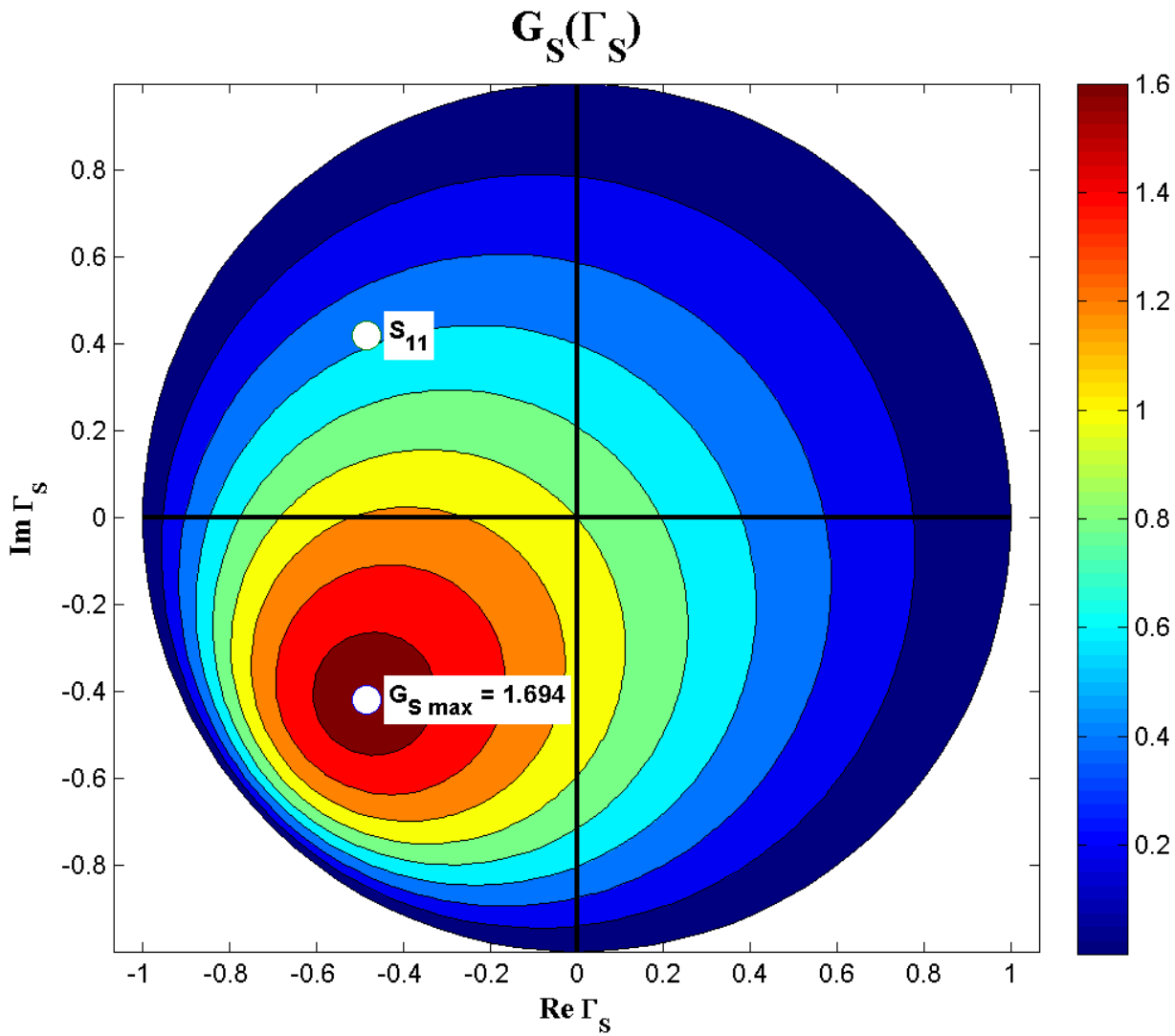

$$G_S = \frac{1-|\Gamma_S|^2}{|1-S_{11}\cdot\Gamma_S|^2}$$

$$G_{S\,\max} = G_S\big|_{\Gamma_S = S_{11}^*}$$

$G_S[dB](\Gamma_S)$, constant value contours

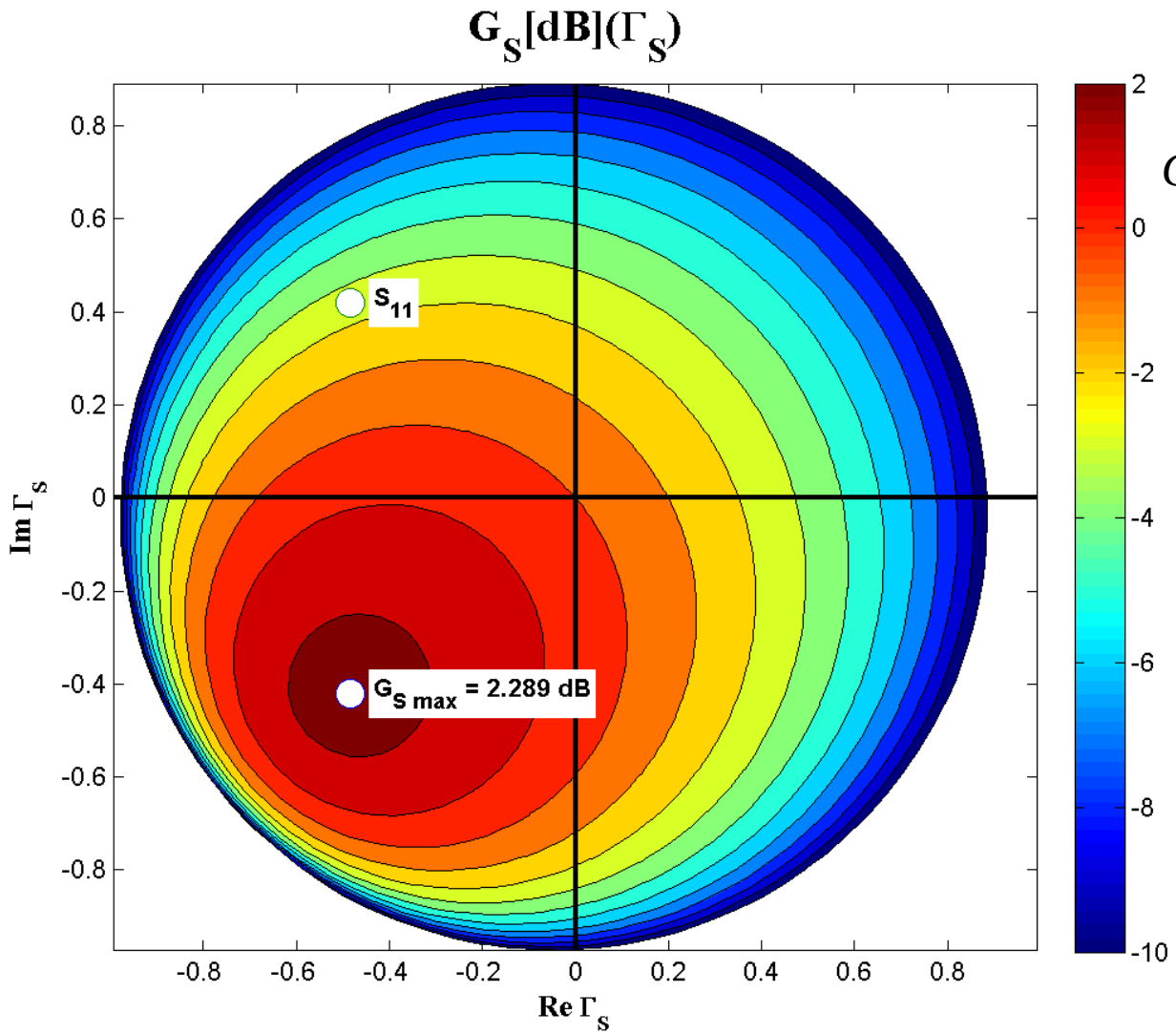

$$G_S[dB] = 10 \cdot \log\left(\frac{1-|\Gamma_S|^2}{|1-S_{11}\cdot\Gamma_S|^2}\right)$$

$$G_{S\,\max} = G_S\big|_{\Gamma_S = S_{11}^*}$$

Input section constant gain circles

$$\left|\Gamma_S - \frac{g_S \cdot S_{11}^*}{1-(1-g_S)\cdot|S_{11}|^2}\right| = \frac{\sqrt{1-g_S}\cdot\left(1-|S_{11}|^2\right)}{1-(1-g_S)\cdot|S_{11}|^2} \qquad |\Gamma_S - C_S| = R_S$$

$$C_S = \frac{g_S \cdot S_{11}^*}{1-(1-g_S)\cdot|S_{11}|^2} \qquad R_S = \frac{\sqrt{1-g_S}\cdot\left(1-|S_{11}|^2\right)}{1-(1-g_S)\cdot|S_{11}|^2}$$

- Equation of a circle in the complex plane where Γ_S is plotted
- **Interpretation**: Any reflection coefficient Γ_S which plotted in the complex plane lies **on** the circle drawn for $g_{circle} = G_{circle}/G_{Smax}$ will lead to a gain $G_S = G_{circle}$
  - Any reflection coefficient Γ_S plotted **outside** this circle will lead to a gain $G_S < G_{circle}$
  - Any reflection coefficient Γ_S plotted **inside** this circle will lead to a gain $G_S > G_{circle}$
- Similar discussion for output port (Γ_L) **CCCIN/CCCOUT**

CCCIN, CCCOUT

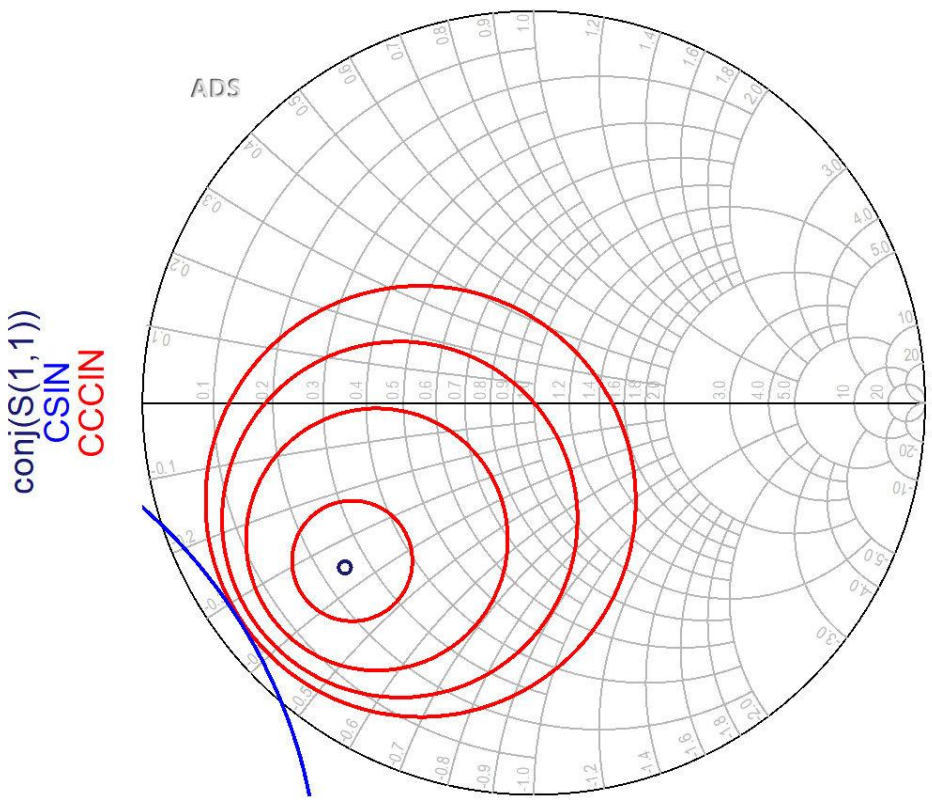

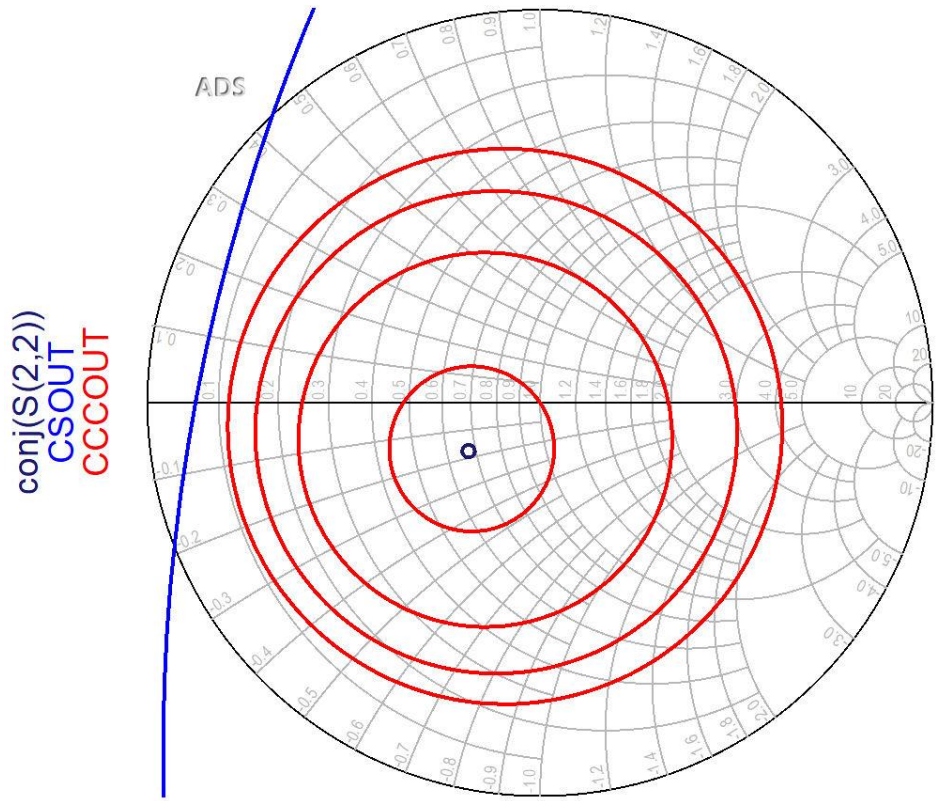

- Circles are plotted for requested values (**in dB!**)
- It is usefull to compute G_{Smax} and G_{Lmax} before
  - in order to request relevant circles

CCCIN, CCCOUT

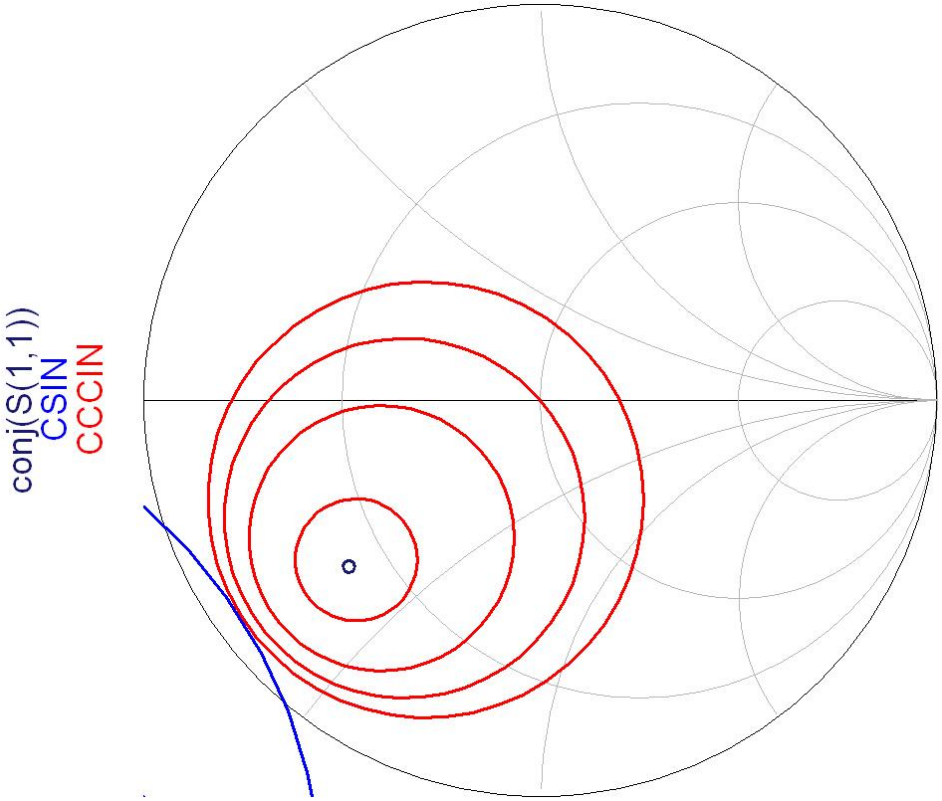

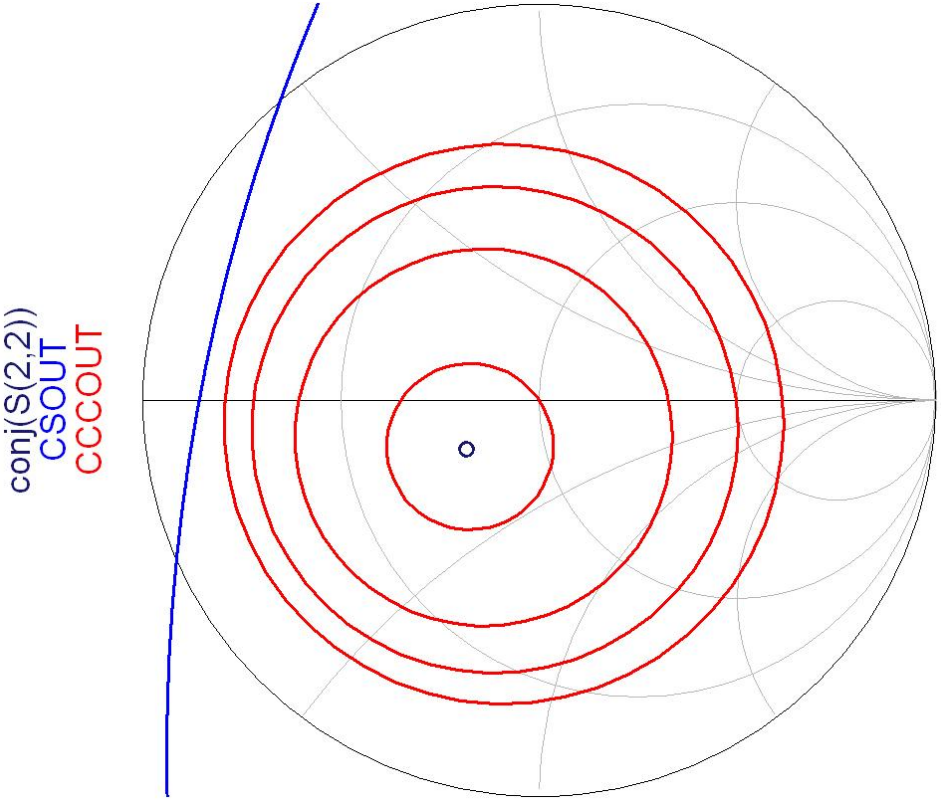

- Cercurile se reprezinta pentru valorile cerute in dB
- Este utila calcularea G_{Smax} si G_{Lmax} anterior

Amplifier as two-port

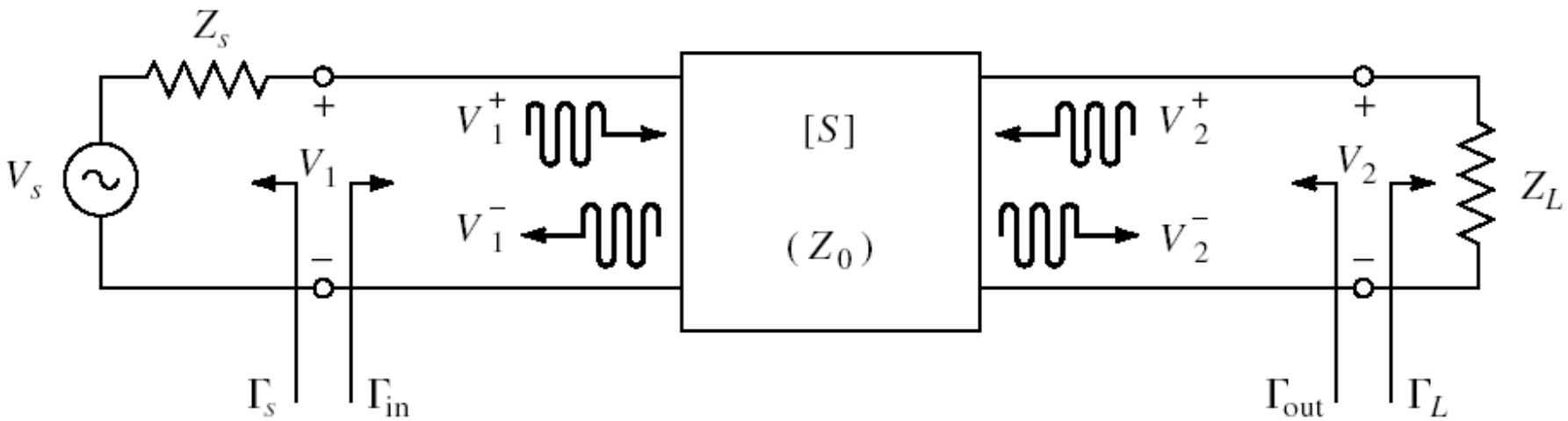

- For an amplifier two-port we are interested in:
  - stability
  - power gain
  - **noise** (sometimes – small signals)
  - linearity (sometimes – large signals)

Noise Figure F

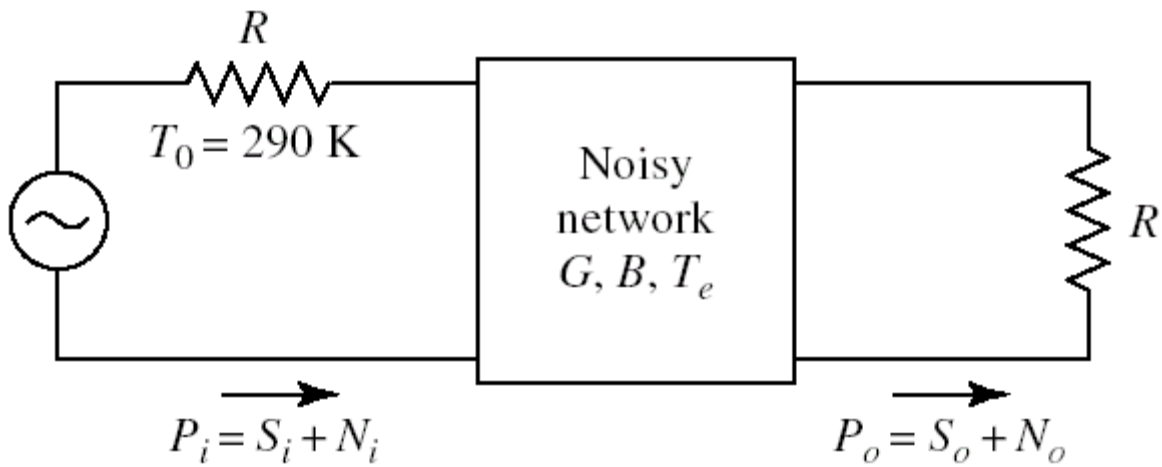

- The noise figure F, is a measure of the reduction in signal-to-noise ratio between the input and output of a device

$$F = \left. \frac{S_i / N_i}{S_o / N_o} \right|_{T_0 = 290K}$$

$F(\Gamma_S)$

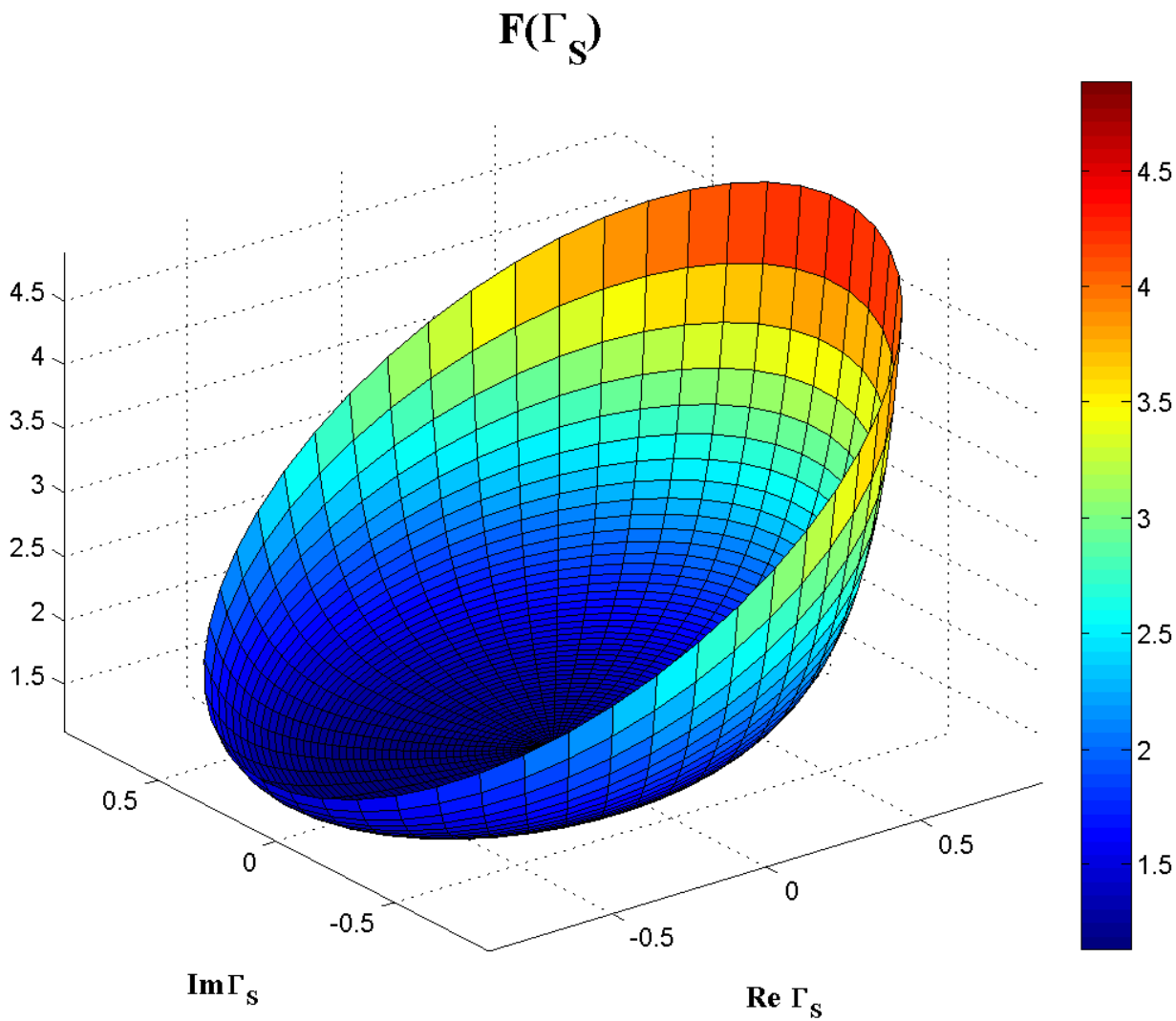

$F[dB](\Gamma_S)$

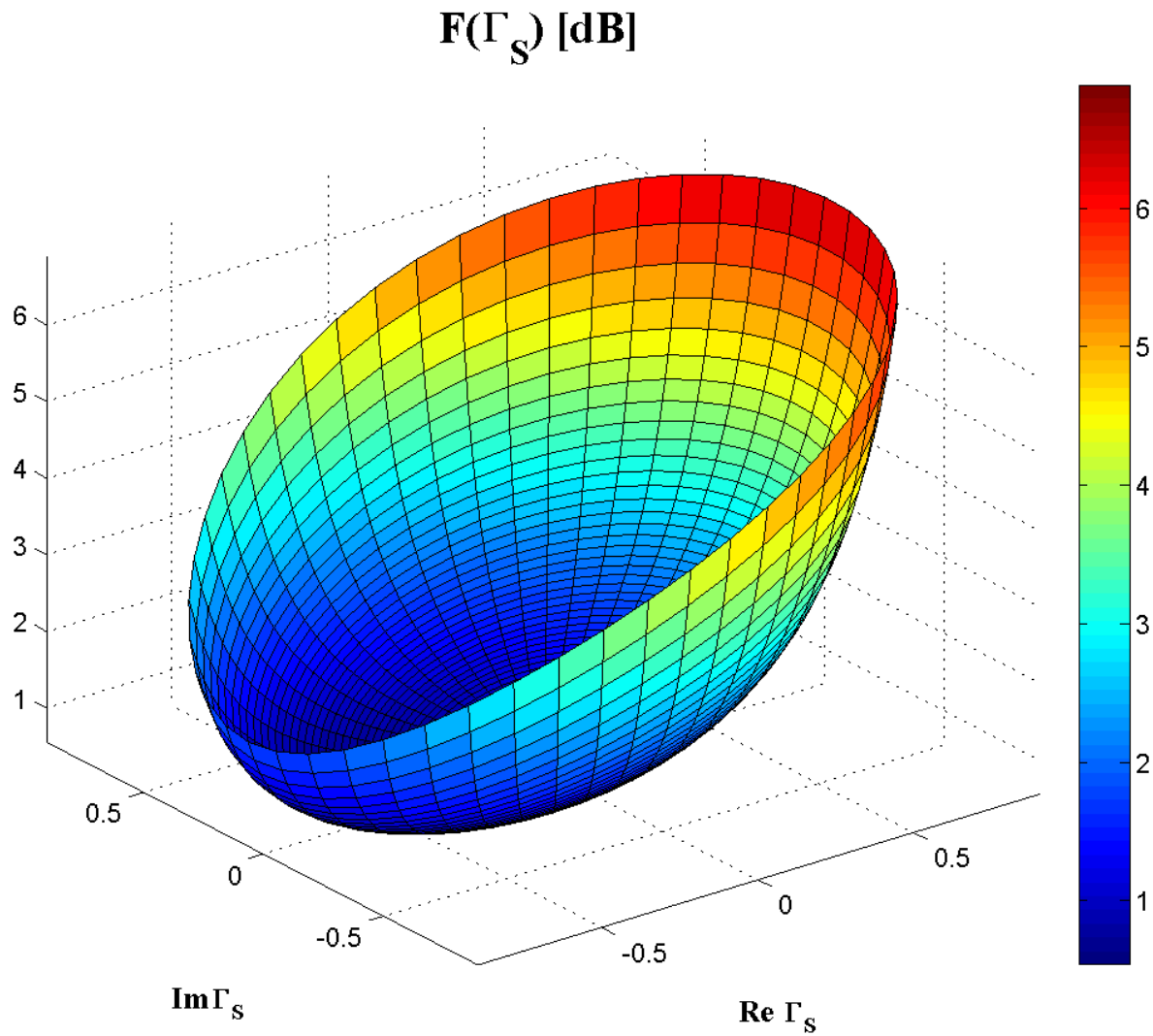

F[dB](Γ_S), constant value contours

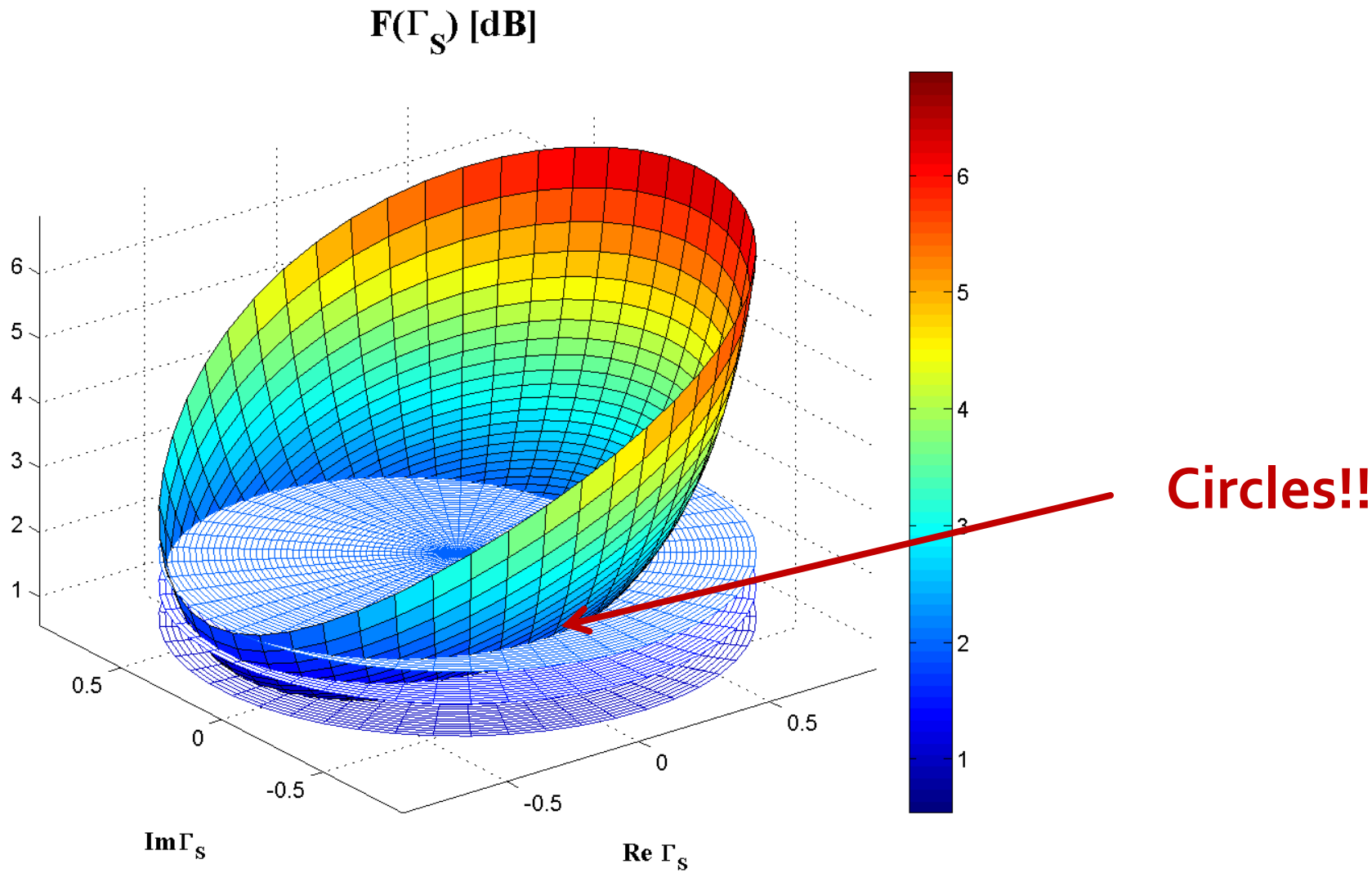

$G_S[dB](\Gamma_S)$, constant value contours

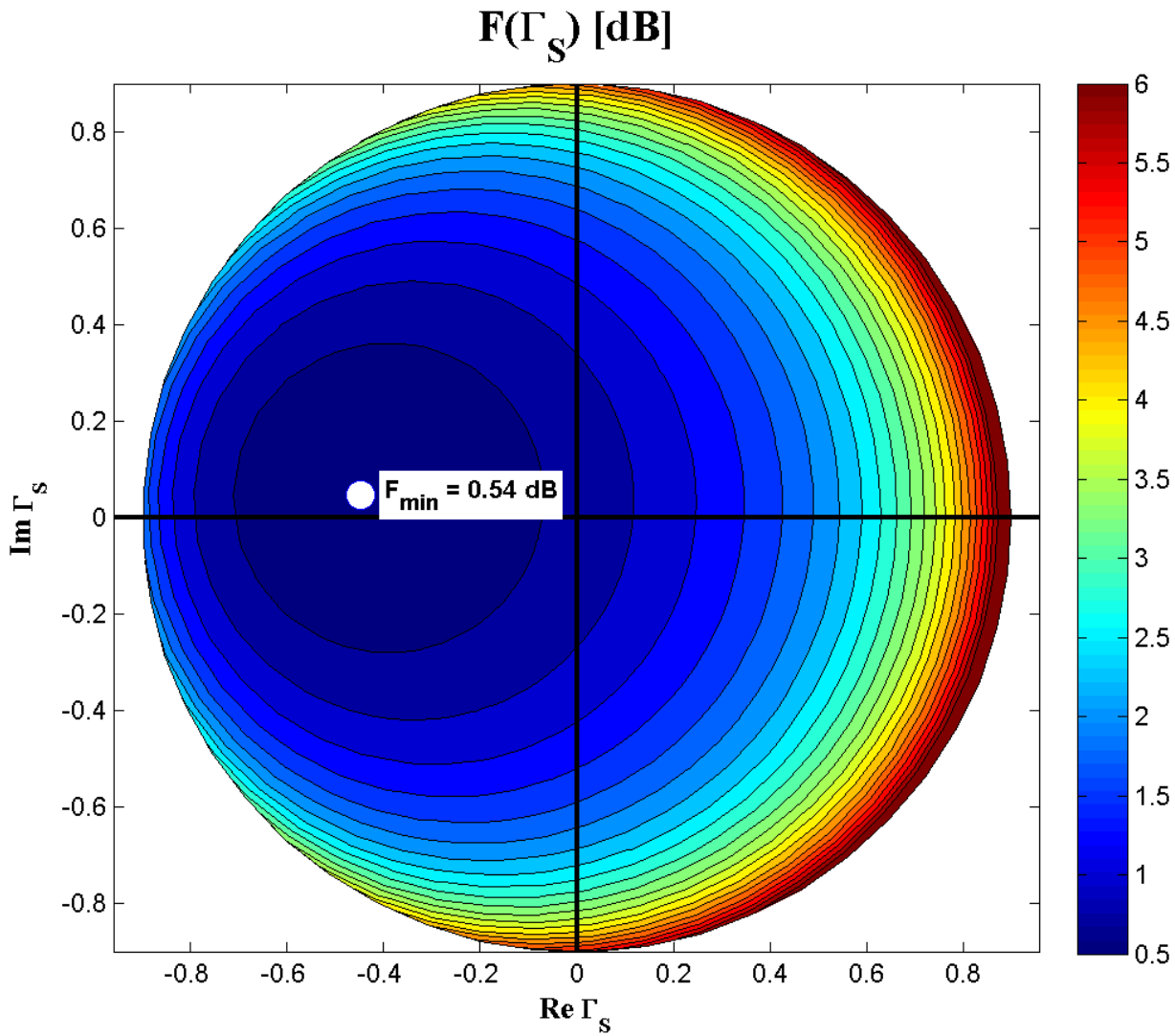

$\Gamma opt = 0.45 \angle 174°$

CZ – Noise Circle (input port only!)

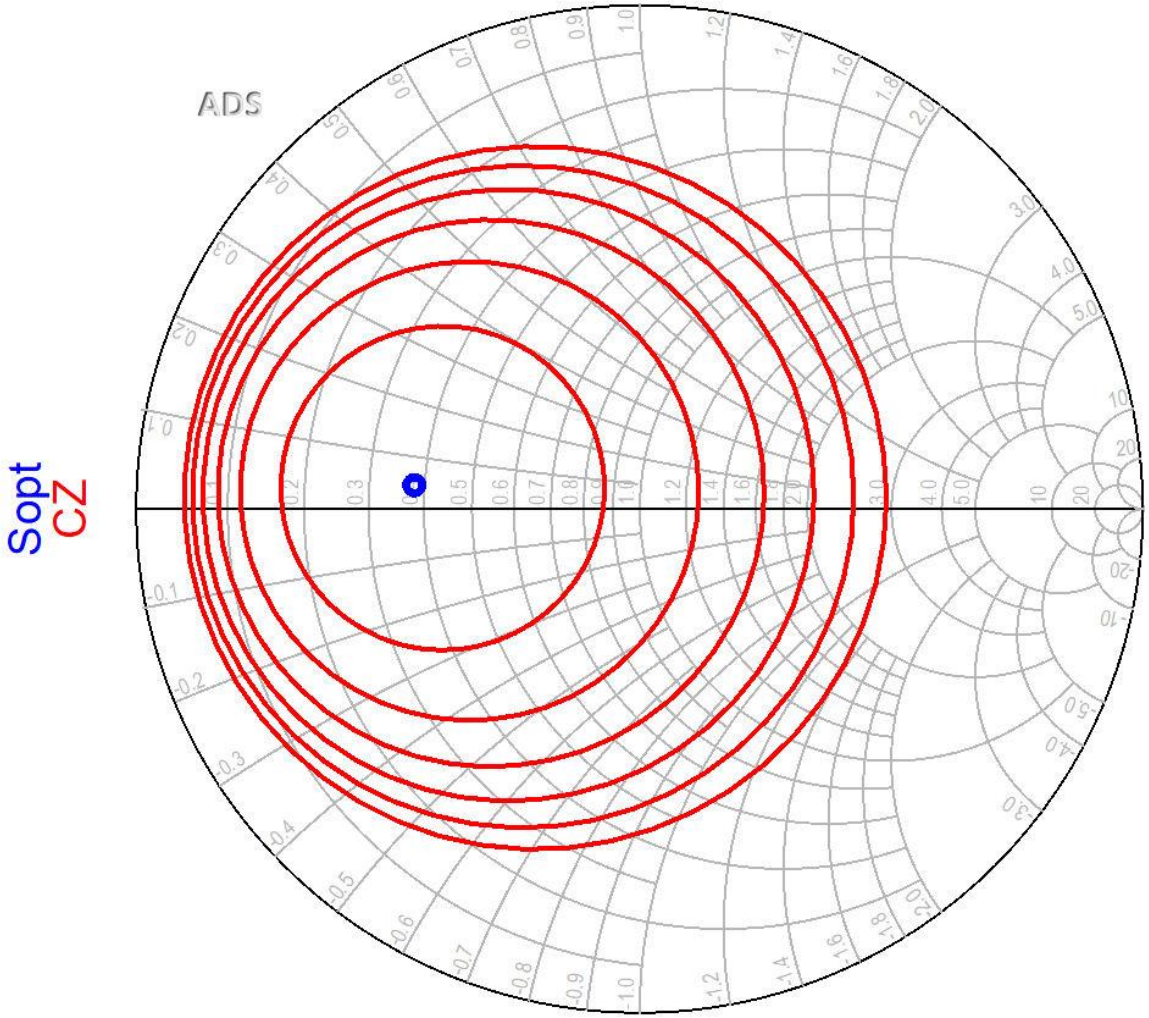

Example, LNA @ 5 GHz

- Low Noise Amplifier
- At the input port we must compromise between
  - noise (~~**input**~~ constant noise circle **CZ**)
  - power gain (input constant gain circle **CCCIN**)
  - stability (input stability circle **CSIN**)
- At the output port noise **does not intervene** (no influence). The compromise is between:
  - power (output constant gain circle **CCCOUT**)
  - stability (output stability circle **CSOUT**)

Input matching circuit

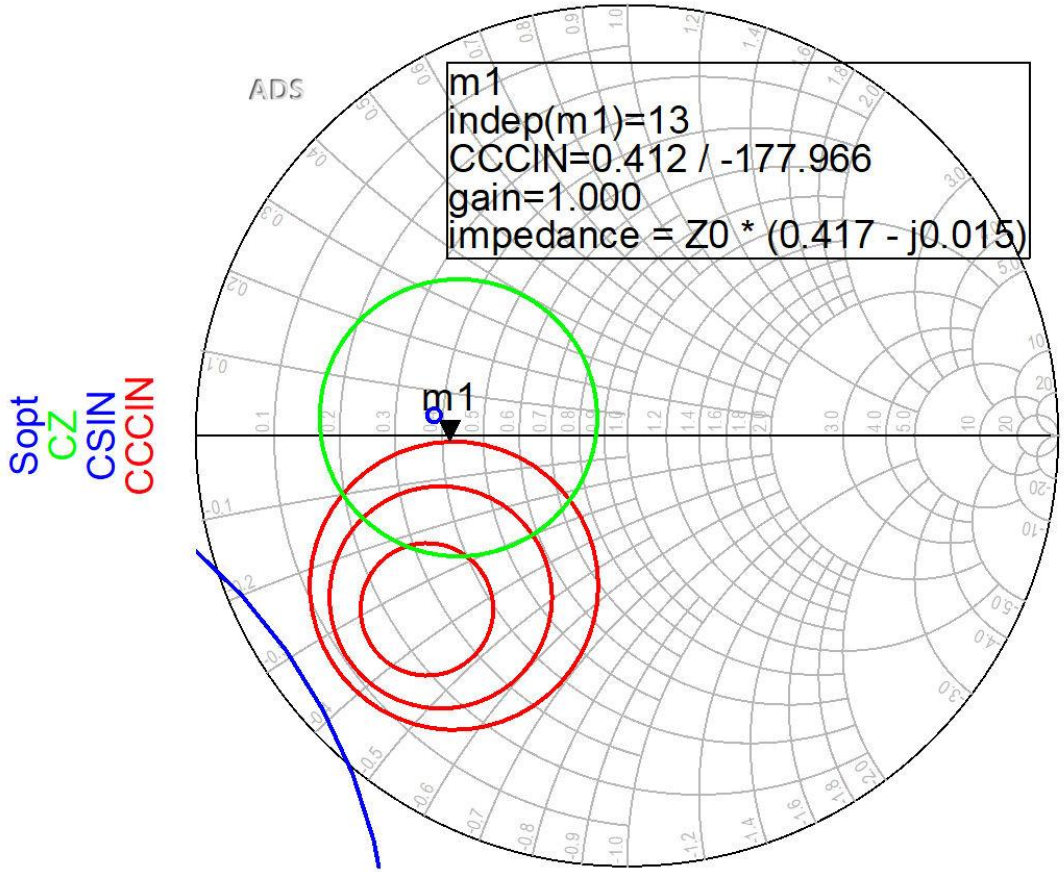

- If we can afford a 1.2dB decrease of the input gain for better NF,Q (Gs = 1 dB), position m1 above is better
- We obtain better (smaller) NF

Output matching circuit

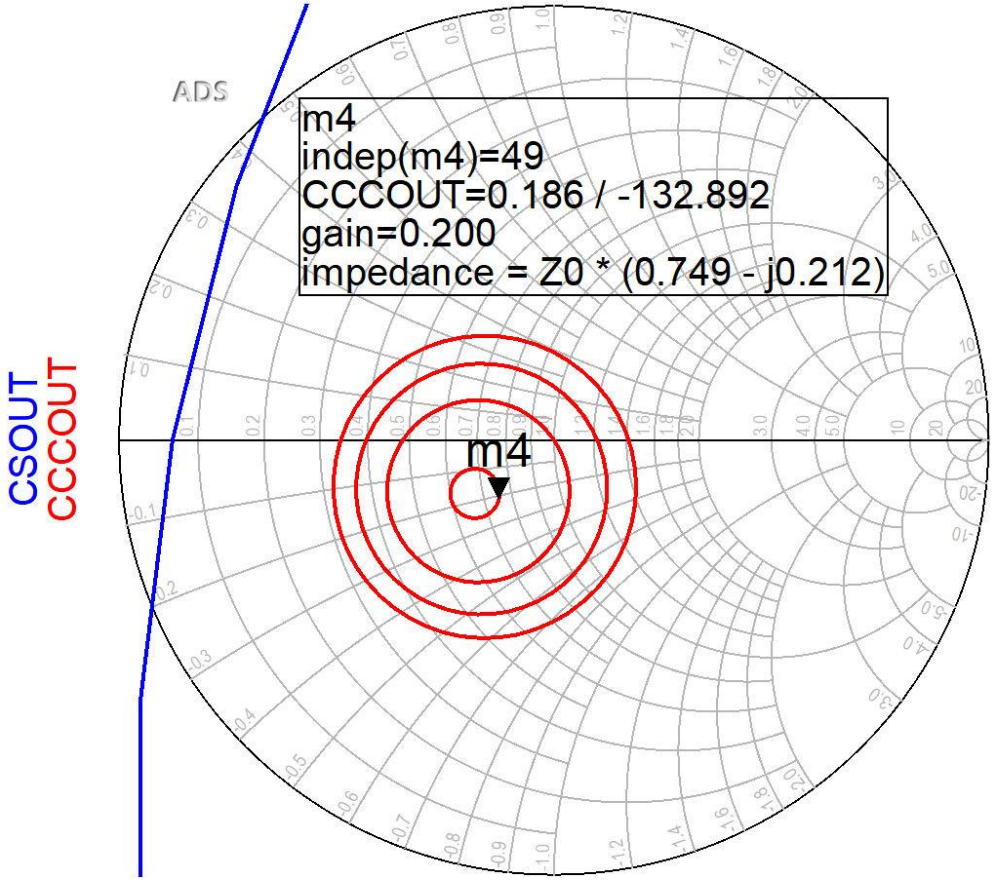

- output constant gain circles CCCOUT: -0.4dB, -0.2dB, 0dB, +0.2dB
- The lack of noise restrictions allows optimization for better gain (close to maximum – position m4)

LNA – Low Noise Amplifier

- Usually a transistor suitable for implementing an LNA at a certain frequency will have input gain circles and noise circles in the same area for Γ_S

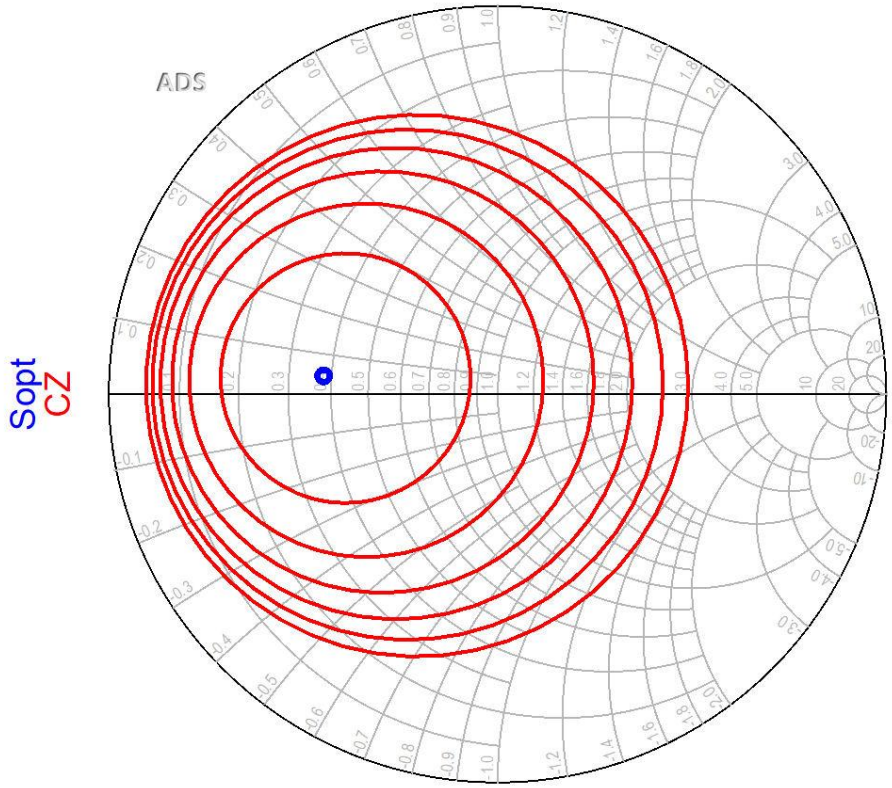

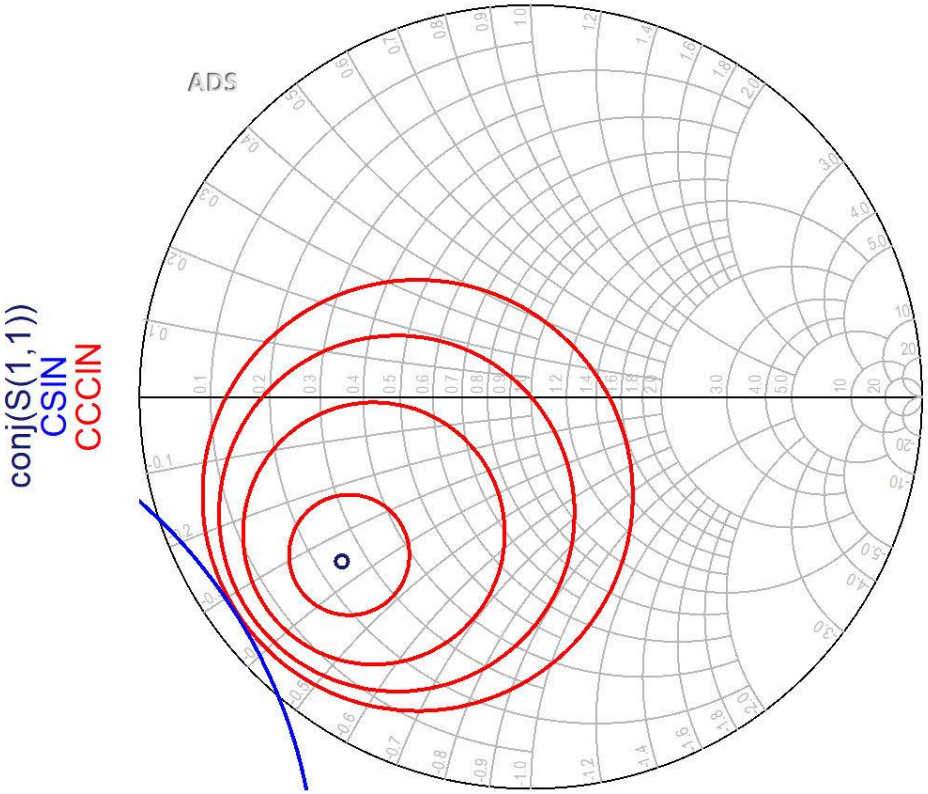

Design for Specified Gain

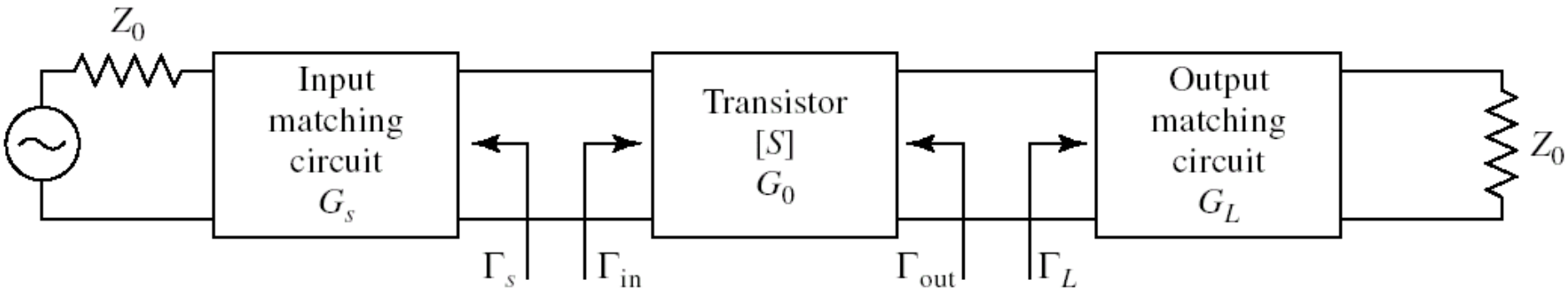

- In the unilateral assumption:

$$G_{TU} = \frac{1-|\Gamma_S|^2}{|1-S_{11}\cdot\Gamma_S|^2}\cdot|S_{21}|^2\cdot\frac{1-|\Gamma_L|^2}{|1-S_{22}\cdot\Gamma_L|^2}$$

$$G_S = \frac{1-|\Gamma_S|^2}{|1-S_{11}\cdot\Gamma_S|^2} \qquad G_0 = |S_{21}|^2 \qquad G_L = \frac{1-|\Gamma_L|^2}{|1-S_{22}\cdot\Gamma_L|^2}$$

$$\boxed{G_S = G_S(\Gamma_S)} \qquad \boxed{G_L = G_L(\Gamma_L)}$$

The Smith Chart, series reactance

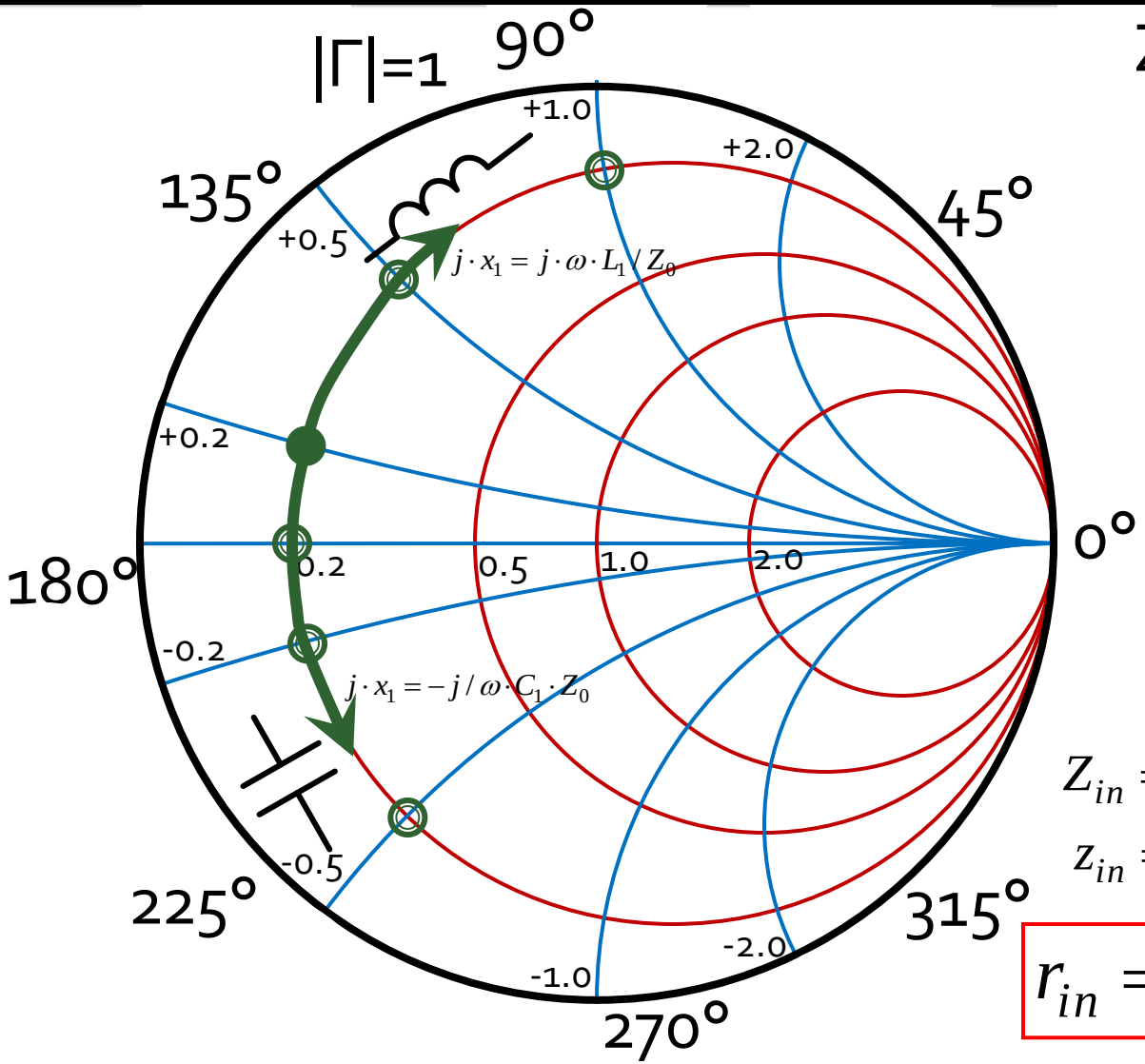

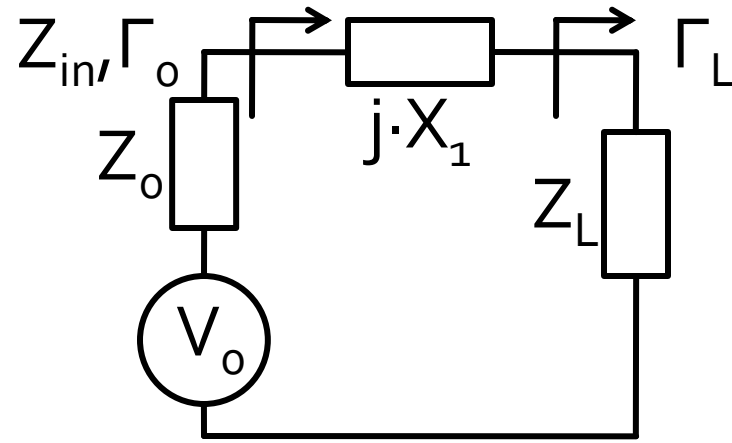

$$Z_0 = 50\Omega$$

$$Z_L = R_L + j \cdot X_L = 10\Omega + j \cdot 10$$

$$z_L = r_L + j \cdot x_L = 0.2 + j \cdot 0.2$$

$$\Gamma_L = 0.678 \angle 156.5°$$

$$Z_{in} = Z_L + j \cdot X_1 = R_L + j \cdot (X_L + X_1$$

$$z_{in} = r_L + j \cdot (x_L + x_1)$$

$$\boxed{r_{in} = r_L}$$

$$j \cdot x_1 = j \cdot \omega \cdot L_1 / Z_0 > 0$$

$$j \cdot x_1 = -j / \omega \cdot C_1 \cdot Z_0 < 0$$

The Smith Chart, shunt susceptance

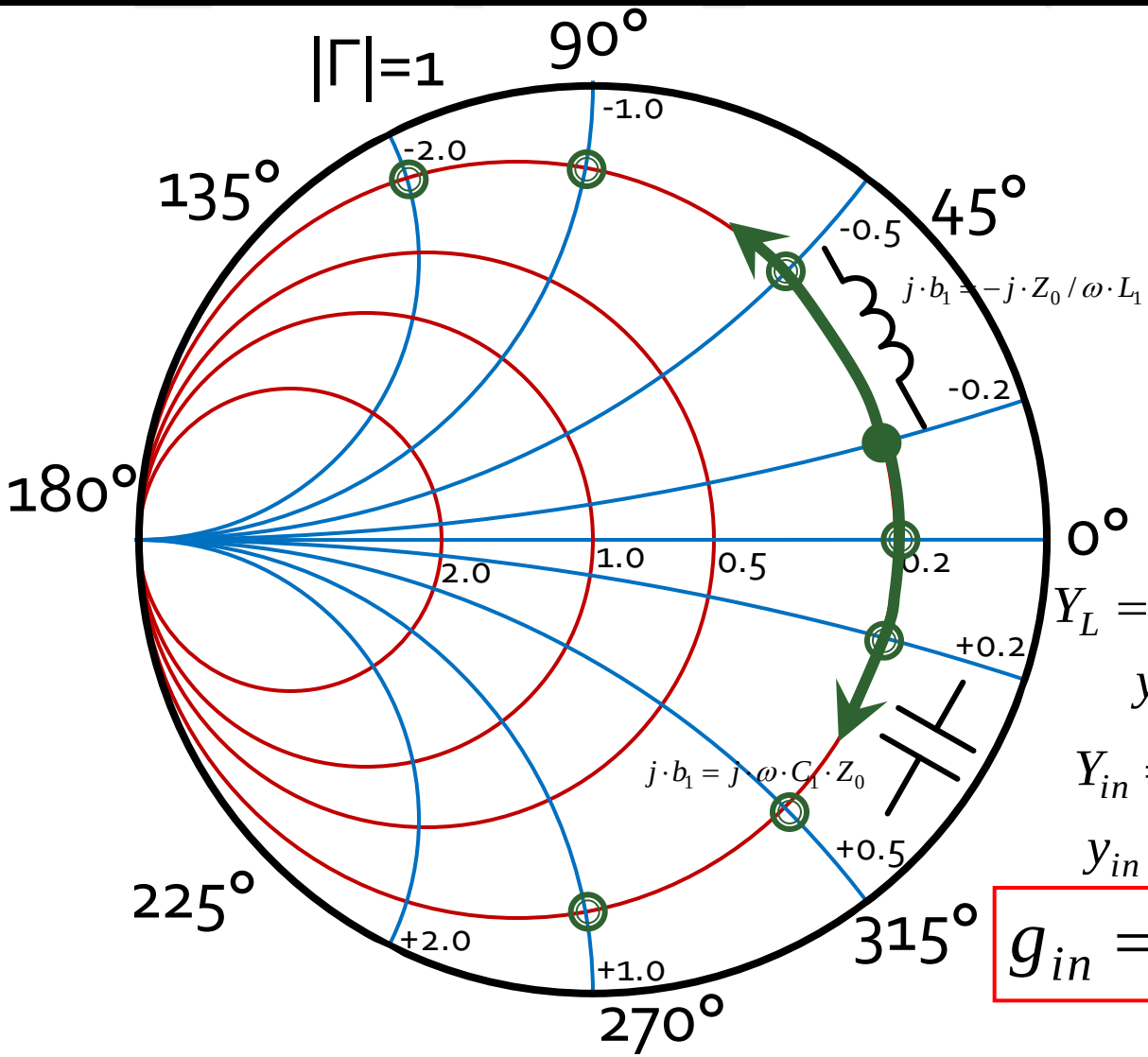

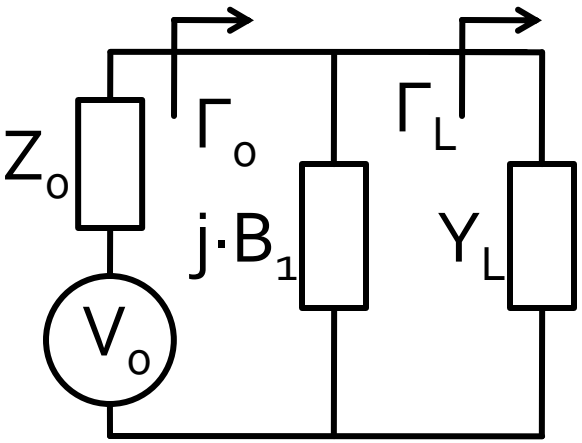

$$Z_0 = 50\Omega, Y_0 = 0.02\,S$$

$$\Gamma_L = 0.678\angle 23.5°$$

$$Y_L = G_L + j \cdot B_L = 0.004\,S + j \cdot 0.004$$

$$y_L = g_L + j \cdot b_L = 0.2 - j \cdot 0.2$$

$$Y_{in} = Y_L + j \cdot B_1 = G_L + j \cdot (B_L + B_1)$$

$$y_{in} = g_L + j \cdot (b_L + b_1)$$

$$\boxed{g_{in} = g_L}$$

$$j \cdot b_1 = j \cdot \omega \cdot C_1 \cdot Z_0 > 0$$

$$j \cdot b_1 = -j \cdot Z_0 / \omega \cdot L_1 < 0$$

Matching, series reactance

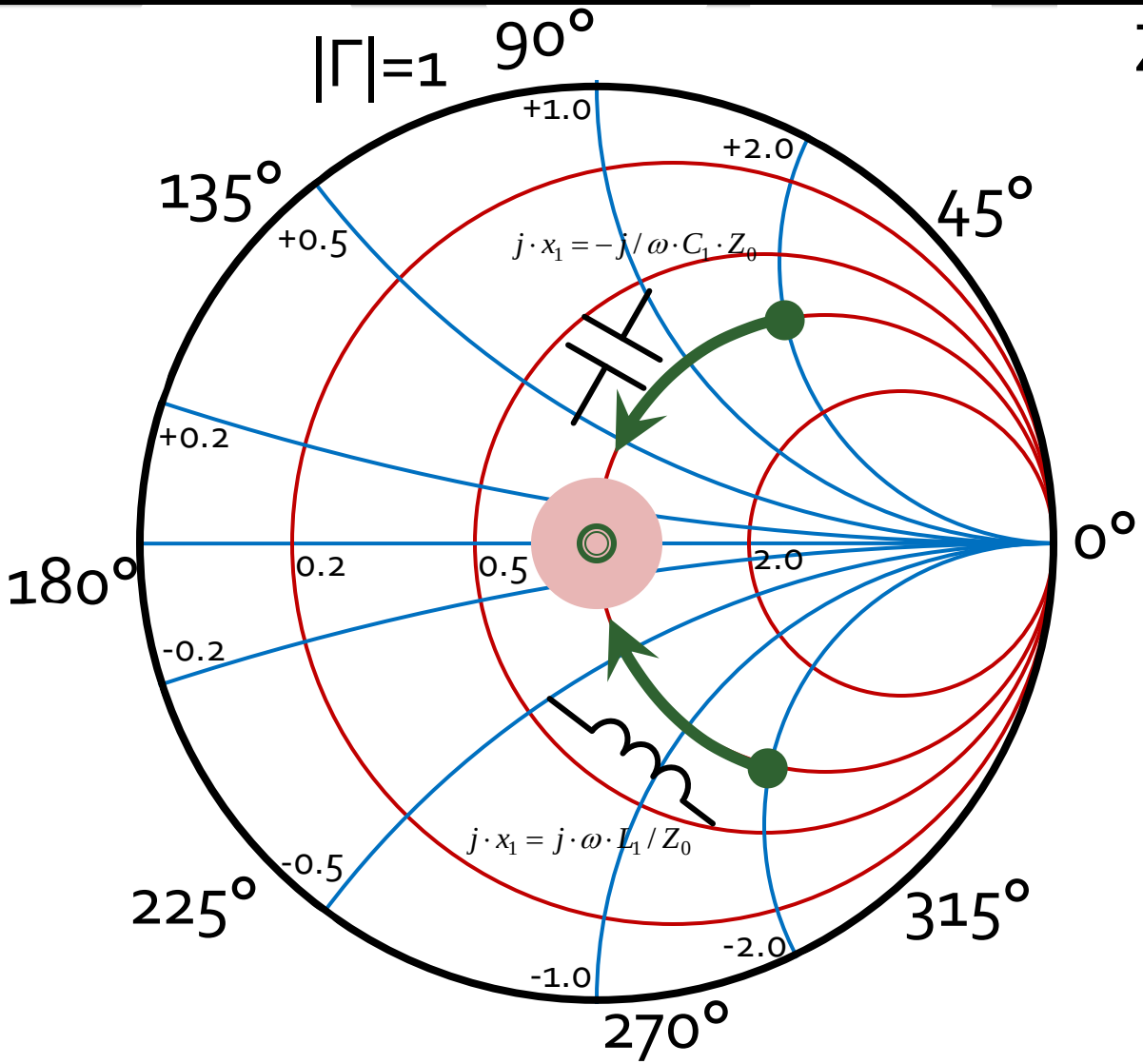

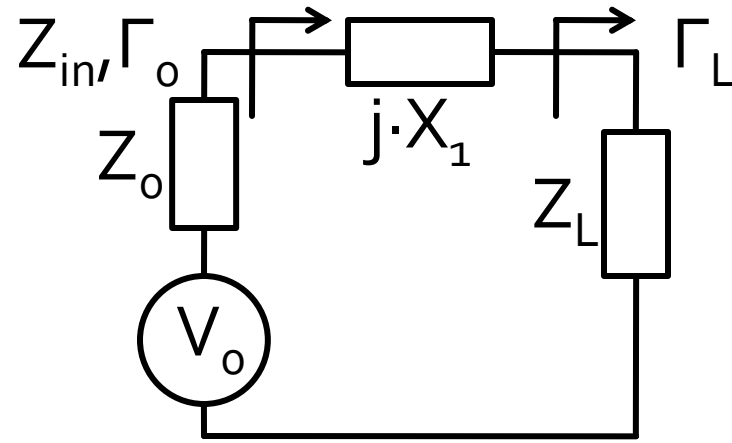

$$z_L = r_L + j \cdot x_L$$

$$z_{in} = r_L + j \cdot (x_L + x_1)$$

$$\boxed{r_{in} = r_L}$$

- Match can be obtained **if and only if** $r_L = 1$
- we compensate the reactive part of the load

$$j \cdot x_1 = -j \cdot x_L$$

Matching, shunt susceptance

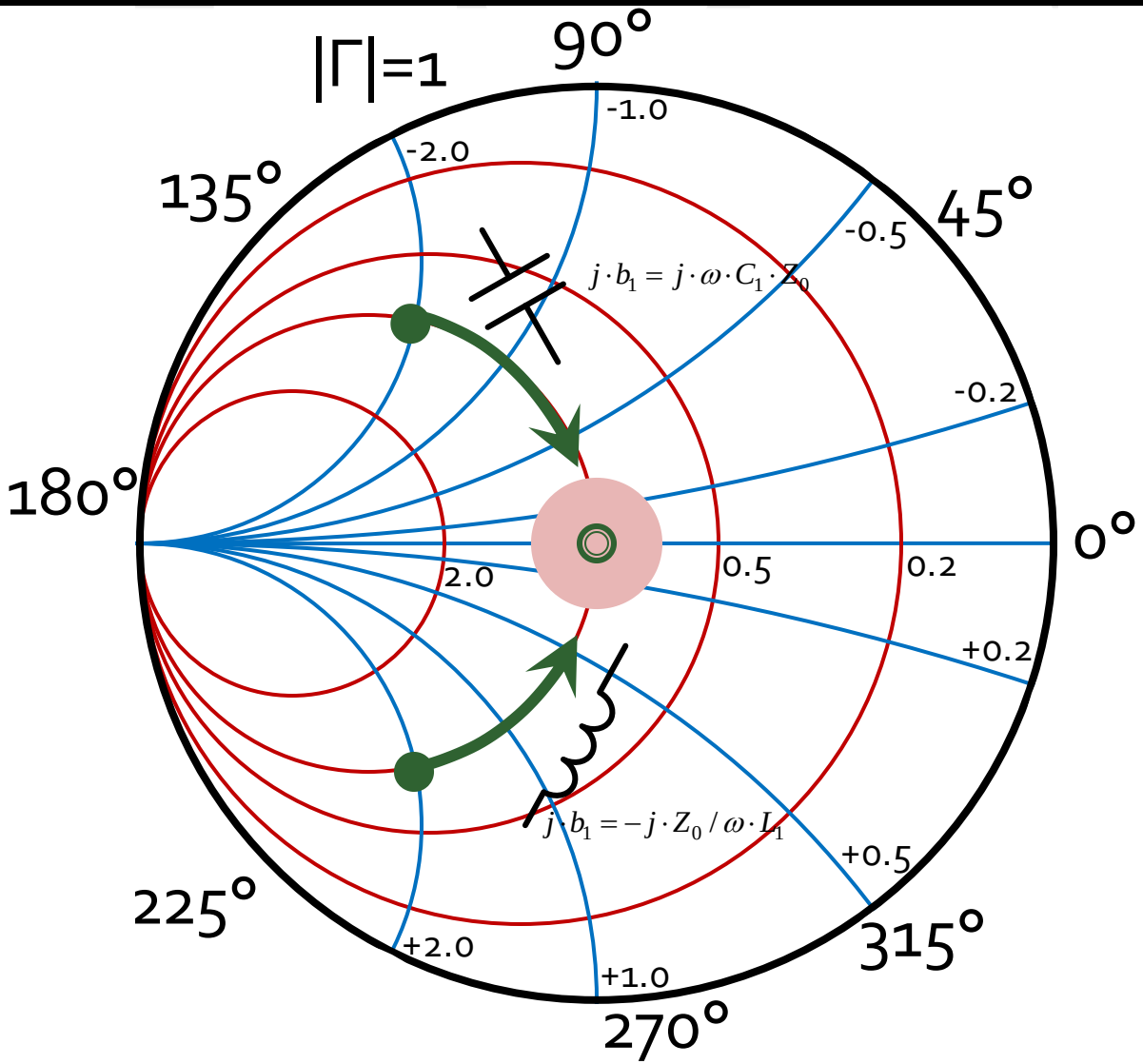

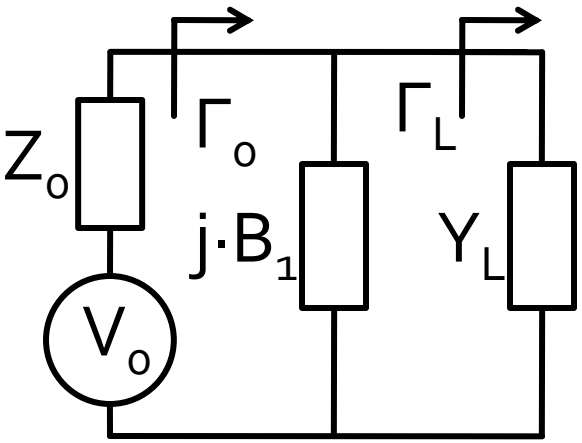

$$y_L = g_L + j \cdot b_L$$

$$y_{in} = g_L + j \cdot (b_L + b_1)$$

$$\boxed{g_{in} = g_L}$$

- Match can be obtained **if and only if** $g_L = 1$
- we compensate the reactive part of the load

$$j \cdot b_1 = -j \cdot b_L$$

Smith chart, r=1 and g=1

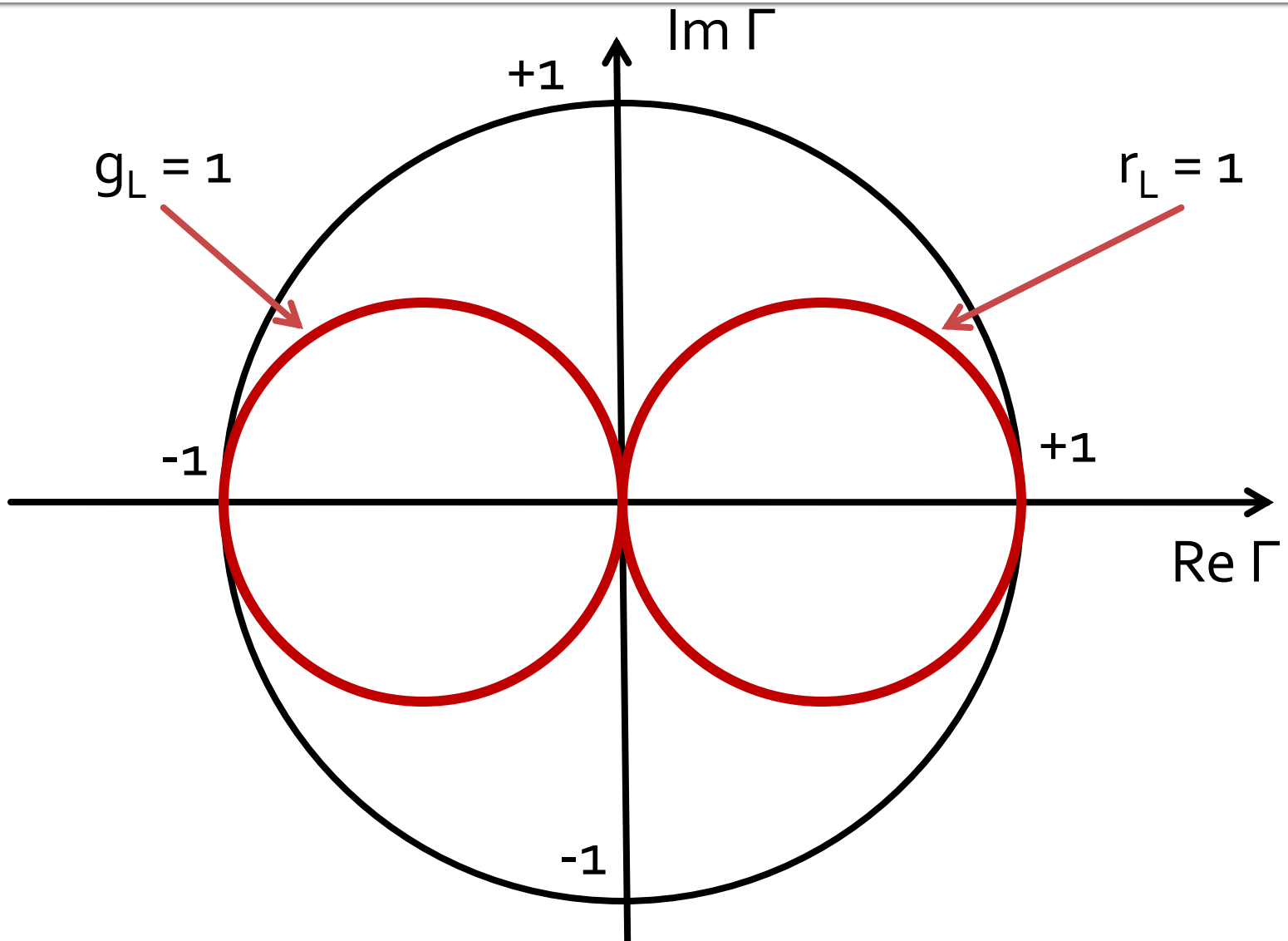

series C, shunt C / shunt C, series C

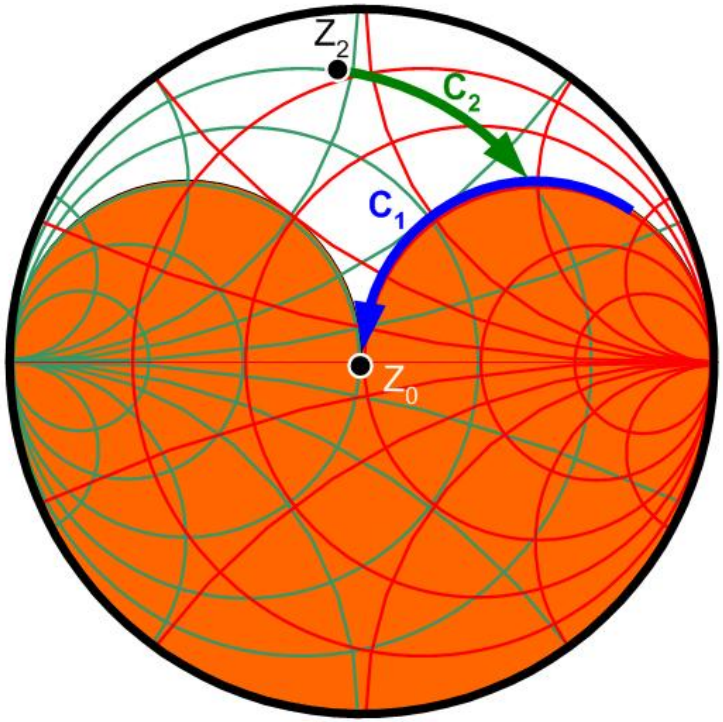

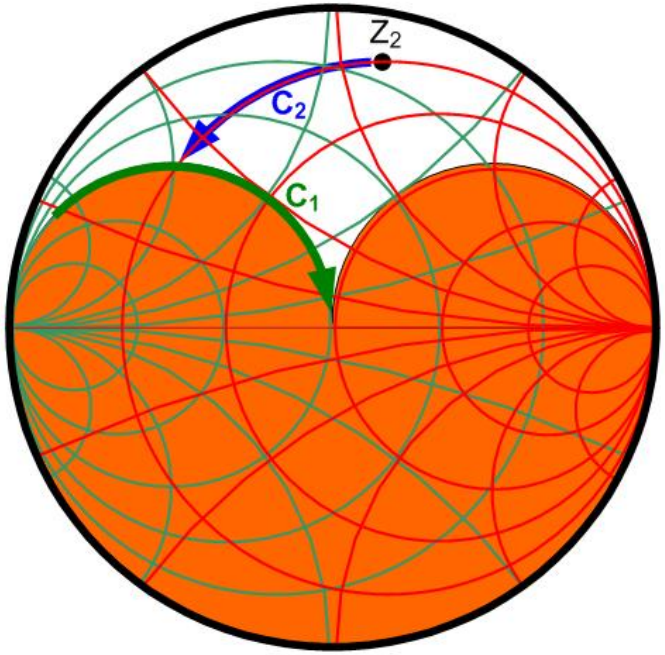

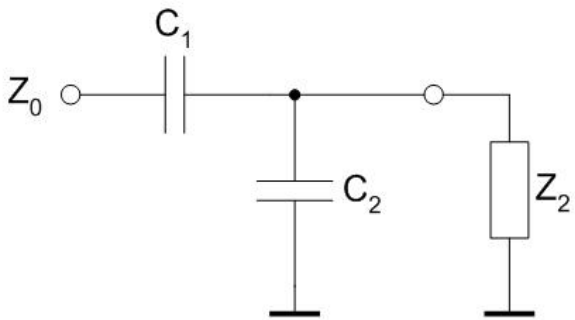

Forbidden area for current network

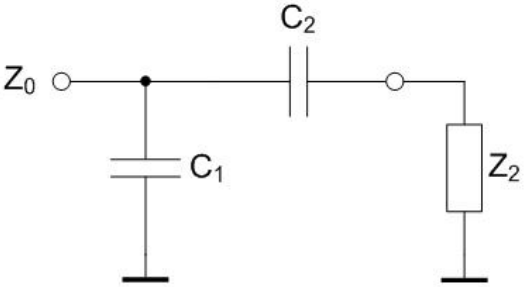

series L, shunt L / shunt L, series L

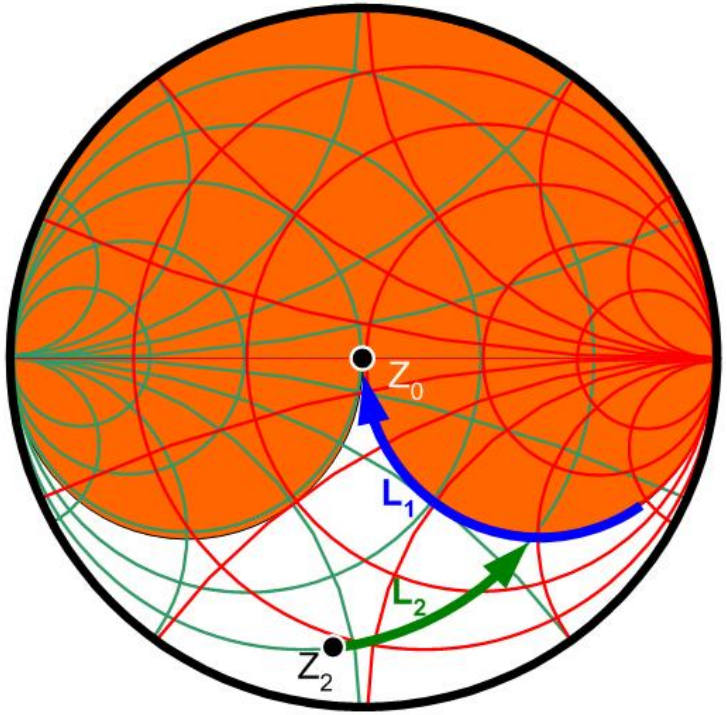

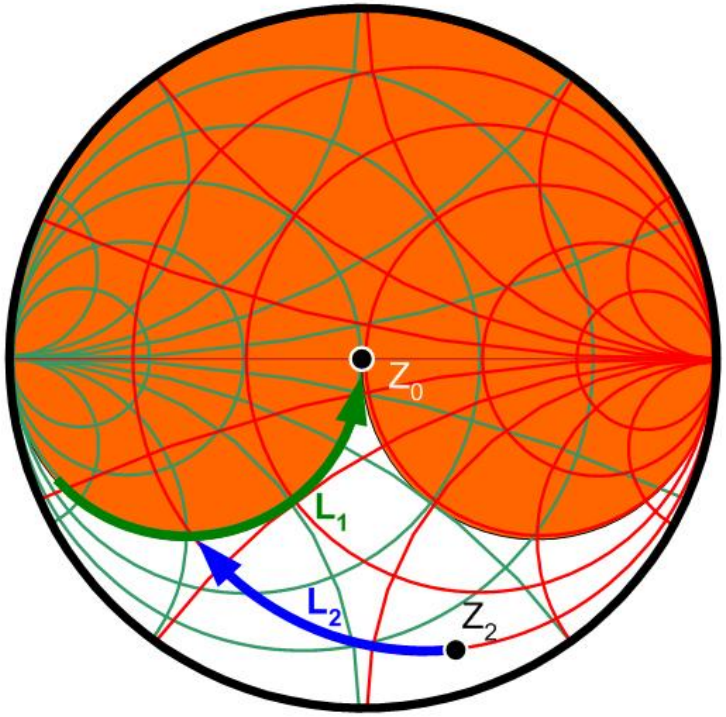

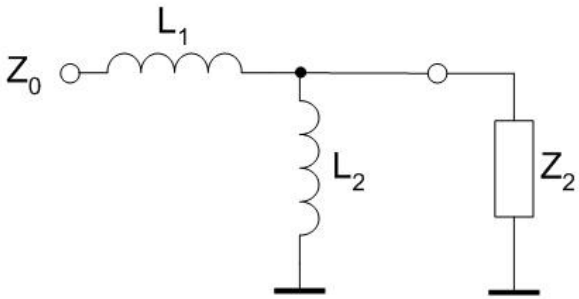

Forbidden area for current network

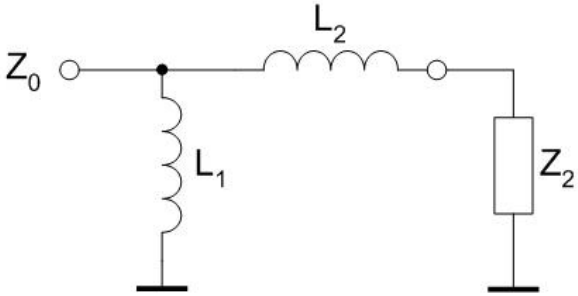

series L, shunt C / shunt C, series L

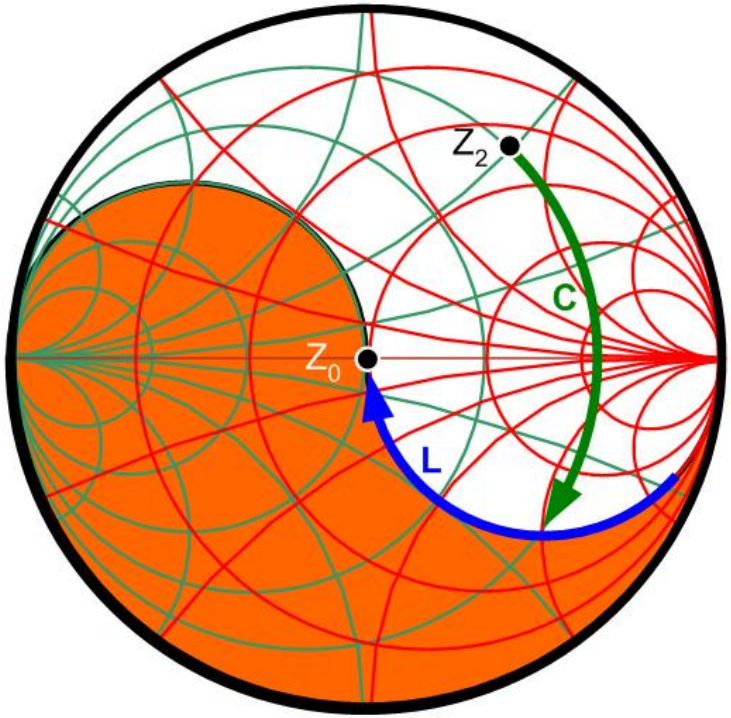

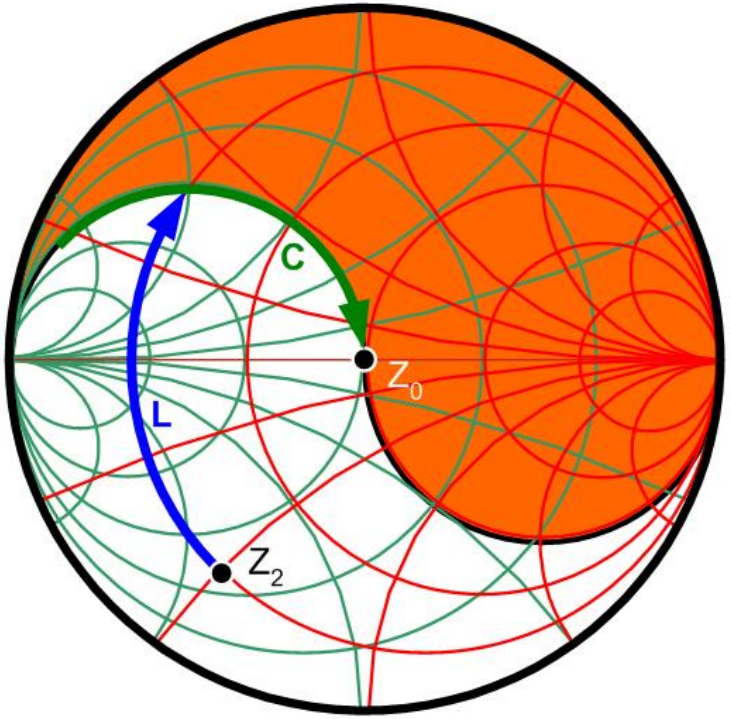

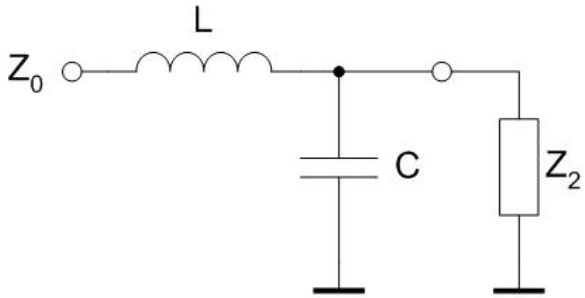

Forbidden area for current network

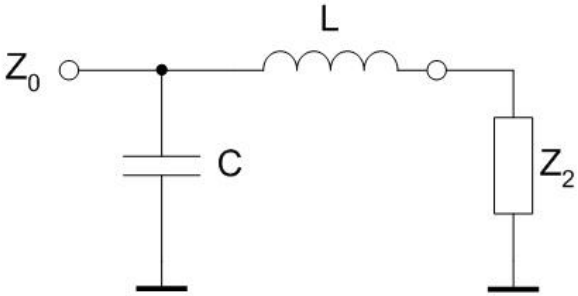

series C, shunt L / shunt L, series C

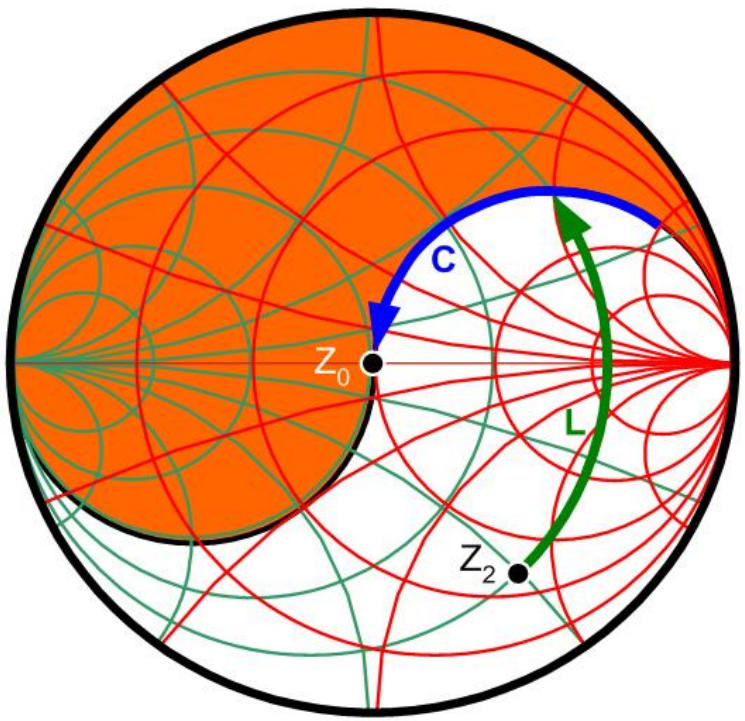

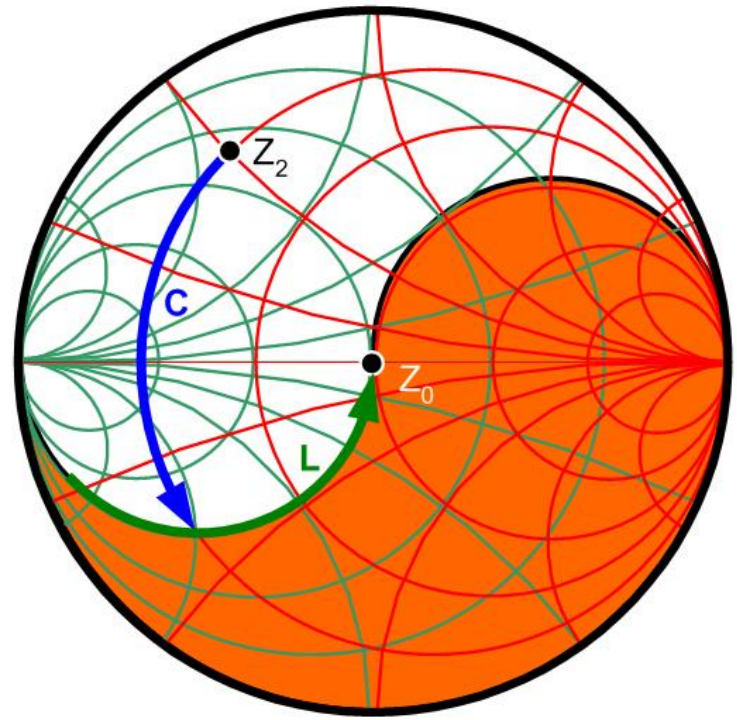

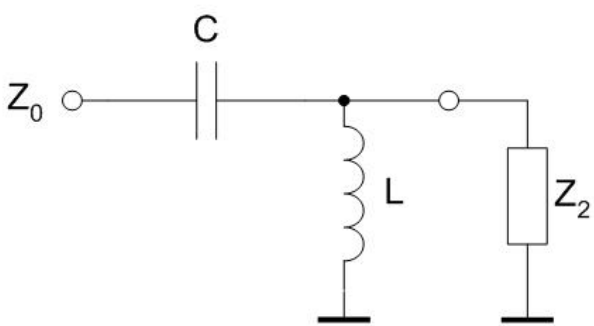

Forbidden area for current network

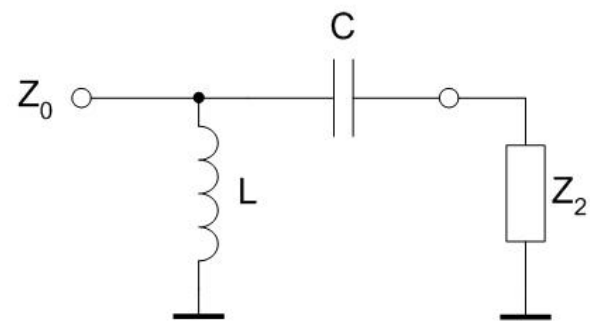

Matching with 2 reactive elements (L Networks)

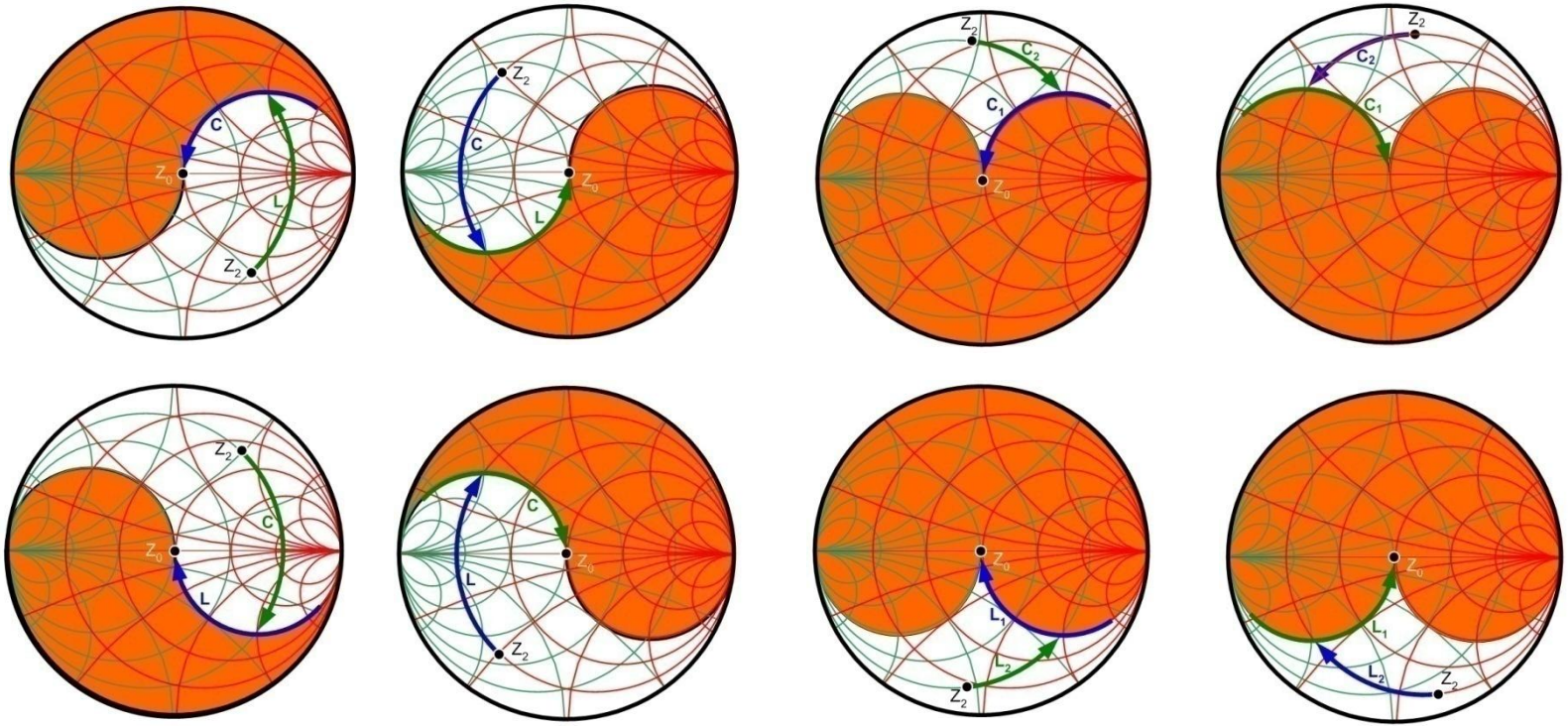

Forbidden area for current network

Matching with 2 reactive elements (L Networks)

- For any Γ_L there are at least 2 possible L networks to achieve match (L+C)
- For some starting areas on the Smith Chart there are 4 possibilities (+2 C+C/L+L networks)
- We choose the network that requires components with existent/practically realizable values
- By adding the resistive elements, we can supplement the number of networks but with **loss of signal power (not recommended)**

Practical Procedure

Step 0

- Laboratory 3-4 will take 2 sessions to complete:
  - lab 3: In the first session you will work with the design data in the example in the lab manual in order to create the **4 (correct) schematics** in a single ADS project
  - **lab 4**: starting from the 4 (**verified**) schematics to design your amplifier (individual data)
- **Caution!** the 4 schematics must be saved in the "networks" folder inside the "…_prj" folder (ADS project) in order to belong to that particular project (and have simulation enabled)

Step 0

- Write by hand on a sheet of paper 100 times:
- **I solemnly promise to read the text AND NOT to jump from picture to picture**
- ☺

Step 1

- Get from the online exam interface from the rf-opto server your individual data
  - design frequency – **fo** [GHz]
  - noise factor – **NF** [dB] (upper limit for the design, if you obtain a lower value it's better, the lowest possible value is highly desirable)
  - power gain – **G** [dB] (lower limit for the design, if you obtain a higher value it's better, acceptable)

Step 2

- change the simulation frequency in **schematic 1** to **fo** and simulate it again

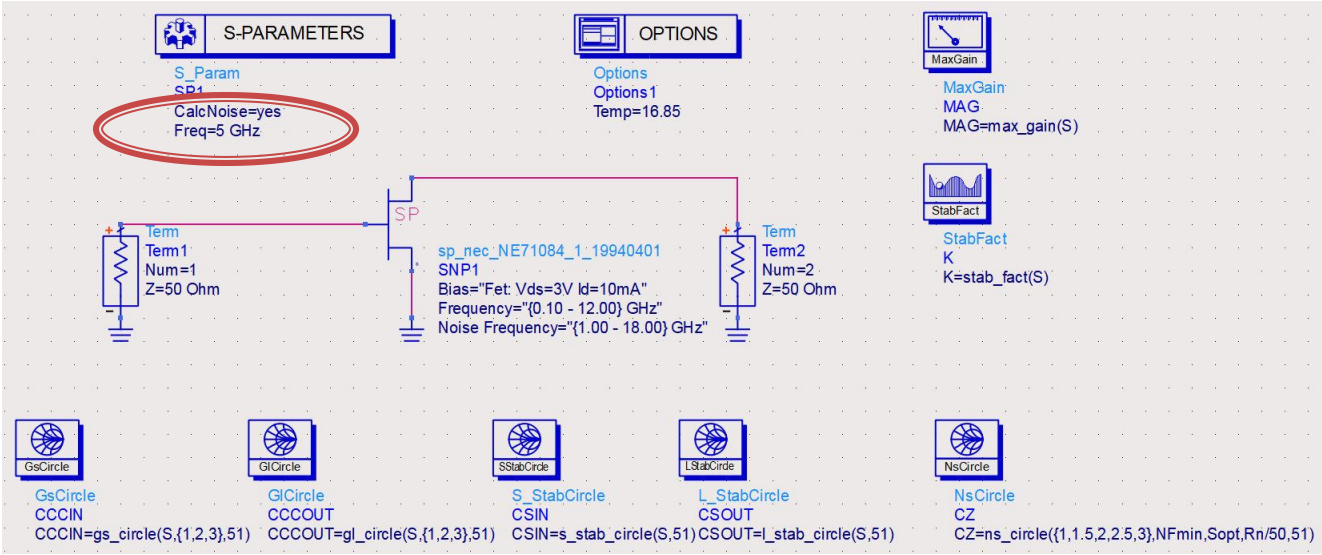

Step 3

- check some values in the table (some obtained from controllers, some from **equations!**)

Eqn gamma_opt=Sopt Eqn G0=10*log(mag(S(2,1))**2)

Eqn GSmax=10*log(1/(1-mag(S(1,1))**2)) Eqn GLmax=10*log(1/(1-mag(S(2,2))**2))

freq	K	MAG	NFmin	Sopt	Rn	G0	GLmax	GSmax
5.000 GHz	0.533	15.298	0.700	0.960 / 106....	19.500	8.974	1.634	4.249

- verify that the transistor can meet the design requirements (otherwise you must choose another transistor)
  - NFmin < **NF**
  - MAG > **G**

Step 4

- check some values in the table (some obtained from **equations!**)

Eqn gamma_opt=Sopt Eqn G0=10*log(mag(S(2,1))**2)

Eqn GSmax=10*log(1/(1-mag(S(1,1))**2)) Eqn GLmax=10*log(1/(1-mag(S(2,2))**2))

freq	K	MAG	NFmin	Sopt	Rn	G0	GLmax	GSmax
5.000 GHz	0.533	15.296	0.700	0.660 / 106....	19.500	8.914	1.634	4.249

- To meet the gain requirement **choose** the supplemental values needed (supplemental to fixed value G_o)

$$G_{design}[dB] = G_{S\_design}[dB] + G_0[dB] + G_{L\_design}[dB]$$

$$G_{design}[dB] > G \quad G_{S\_design}[dB] < GS\max \quad G_{L\_design}[dB] < GL\max$$

Step 5

- in schematic 1 change the values for the circles (instead of {1,2,3} choose some values close to GS_design, GL_design, NF_design) – all numerical values **must** be in **dB**

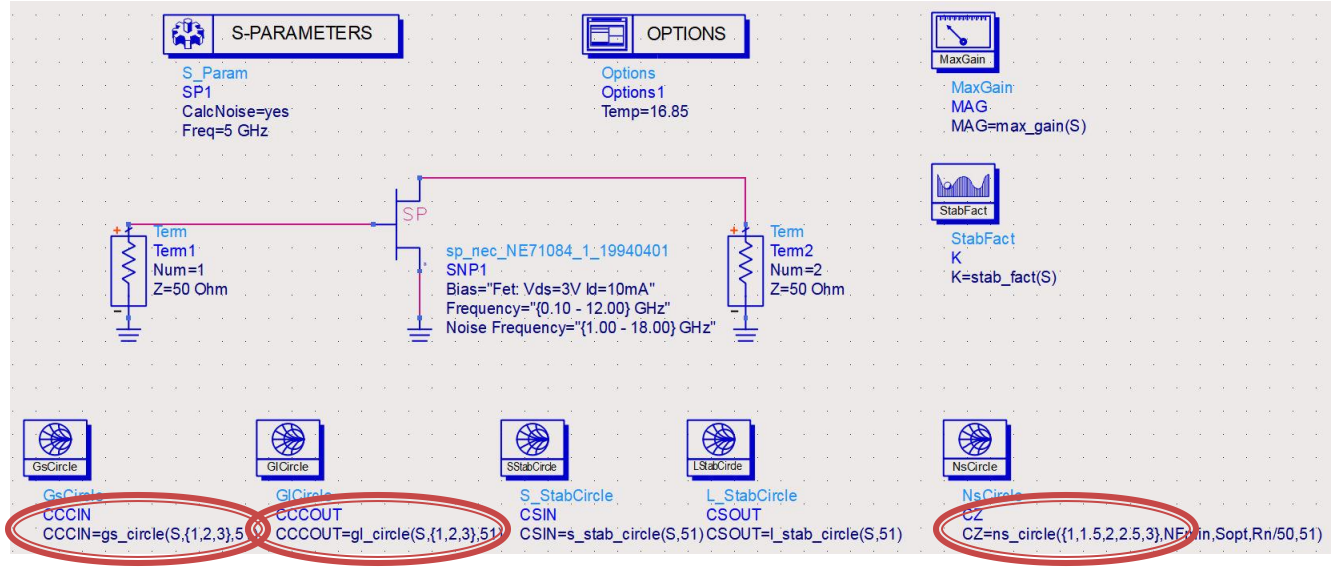

Step 6

- simulate again schematic 1, plot **groups of circles** and verify they are in the right position

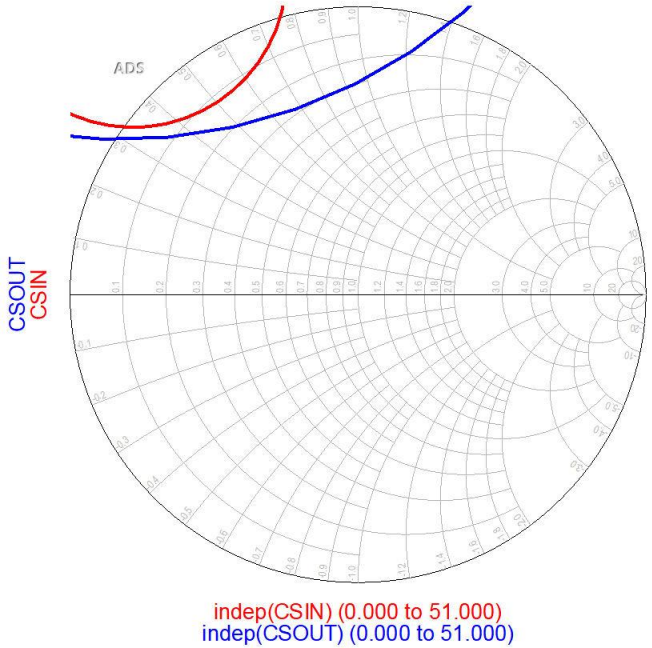

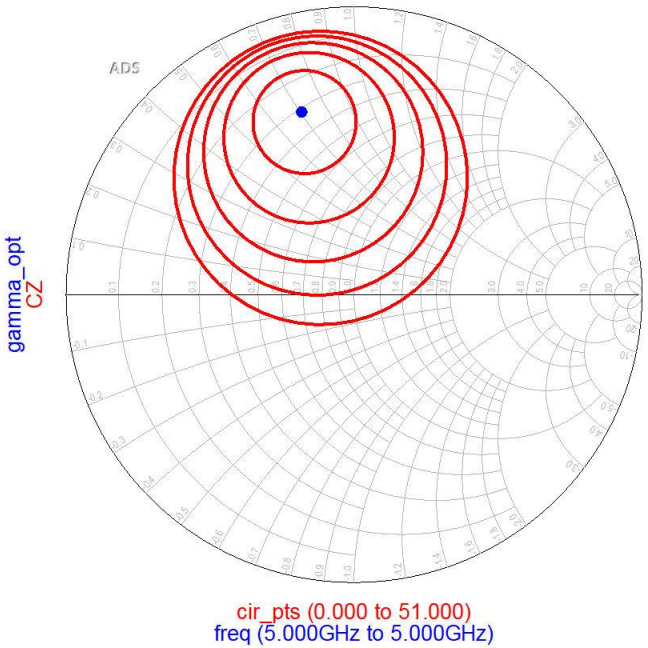

Step 7

- change the simulation frequency in **schematic 2** to **fo**
- analyze results in **schematic 1** and choose **a single circle** as target for the design (in **VAR**):
  - stability (input/output)
  - gain (input GS_design/output GL_design)
  - noise (input NF_design)
- plotting these circles is not required
  - they will be effectively used in **schematic 3**

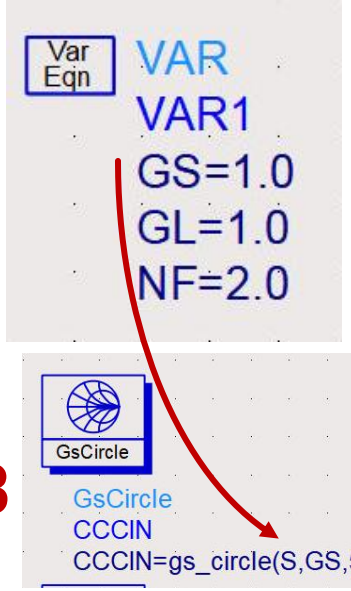

Step 7

- even if the circles are not plotted, they are **computed** (for the transistor)
  - 3 input plane (stability/gain/noise)
  - 2 output (stability/gain)
- It is recommended to provide a margin for the design:
  - G_design > **G + ΔG**
  - NF_design < **NF - ΔNF**
- simulate **schematic 2** again

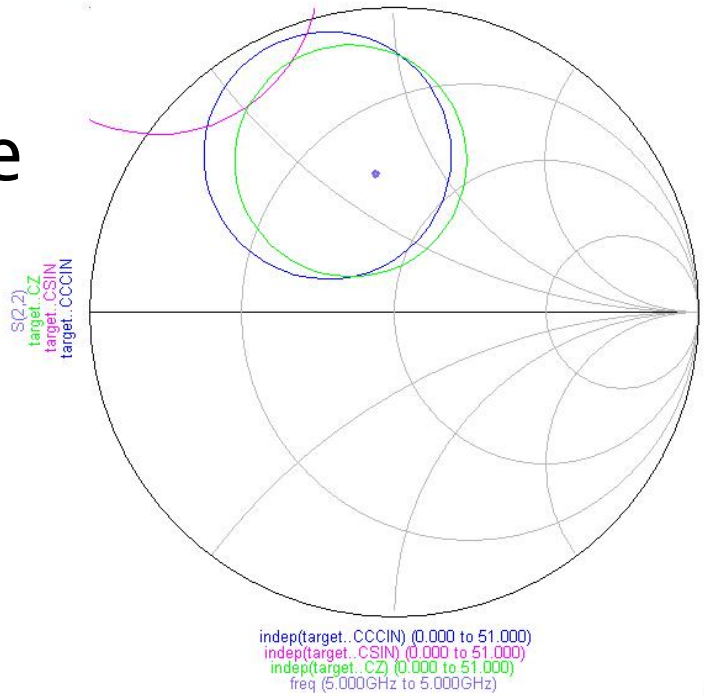

Step 8

- change the simulation frequency in **schematic 3** – **fo** and simulate it again
- plot and use the circles computed in **schematic 2** as target while tuning

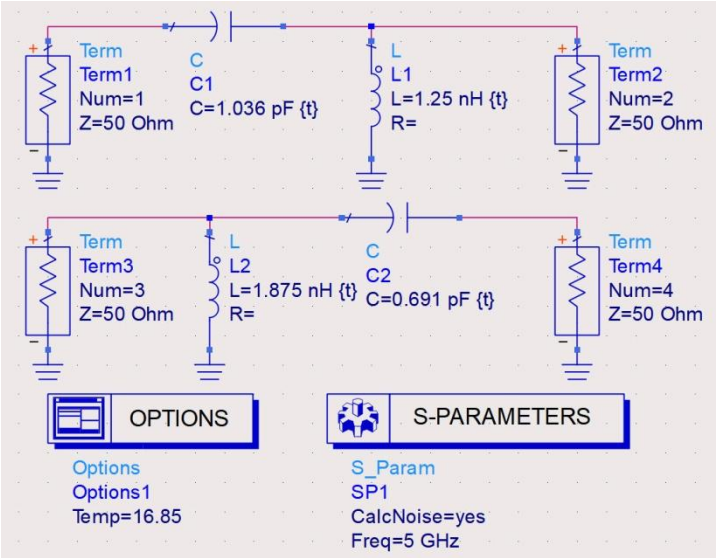

Step 9

- **tune** the components in the two L networks to reach the desired points

Computed in schematic 2

Computed in schematic 3

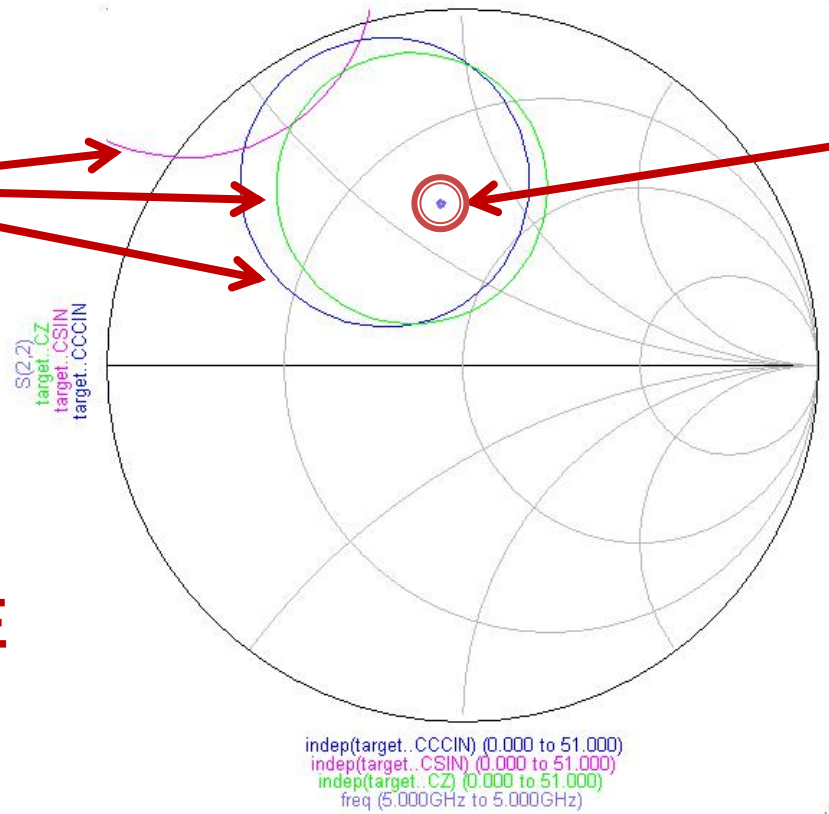

INPUT PLANE

L1, C1

Step 10

- **tune** the components in the two L networks to reach the desired points

Computed in schematic 2

Computed in schematic 3

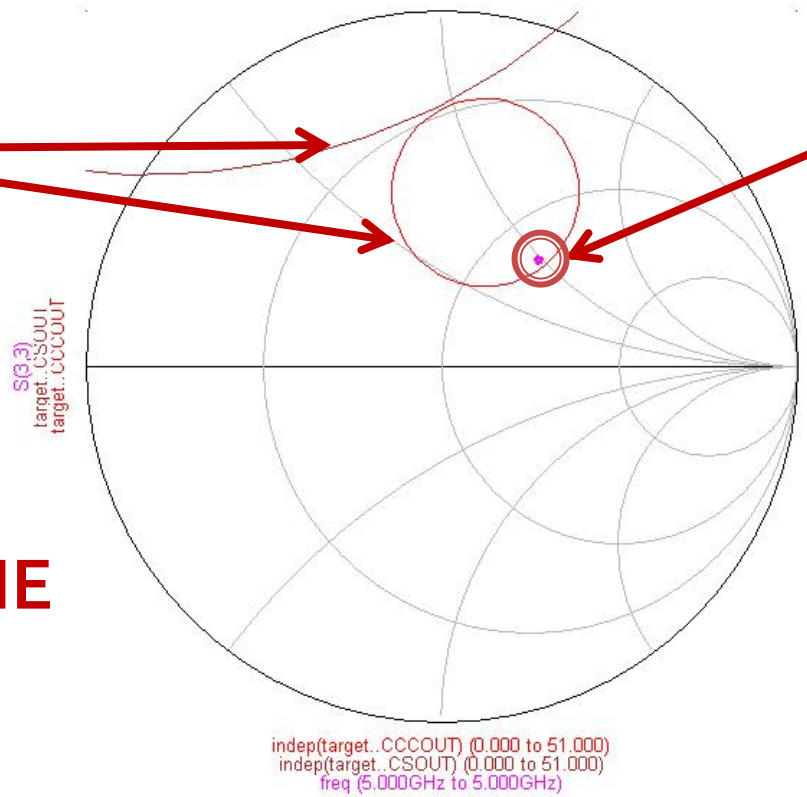

OUTPUT PLANE

L2, C2

Step 11

- if you cannot reach the appropriate position (by relation to the circles) then most likely the desired position lies in the forbidden area for that particular L network
  - **change** to another L network (LC/CL, series/shunt etc)

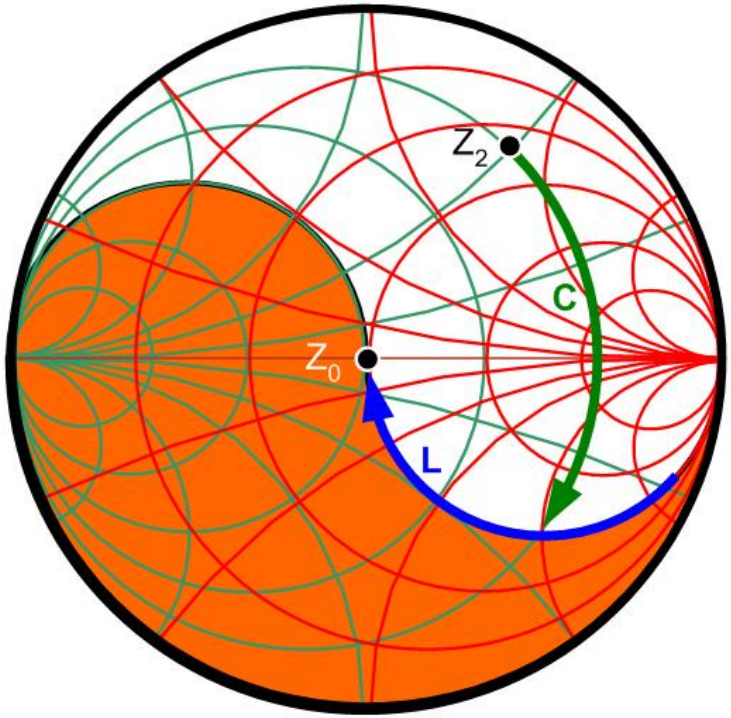

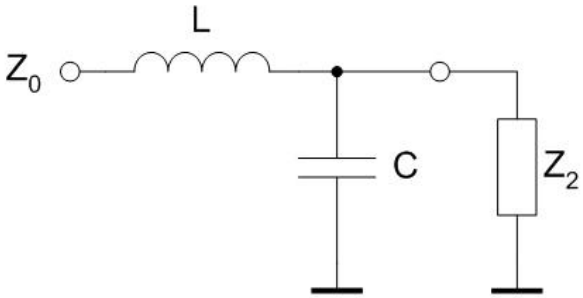

Step 12

- insert the components obtained by tuning in **schematic 3** as input/output matching networks for the transistor in **schematic 4** (values and network shape!)
- change the simulation frequencies in **schematic 4** – around **fo** (**fo** in the **center** of the simulation range) and simulate it again

Obtained in schematic 3

Obtained in schematic 3

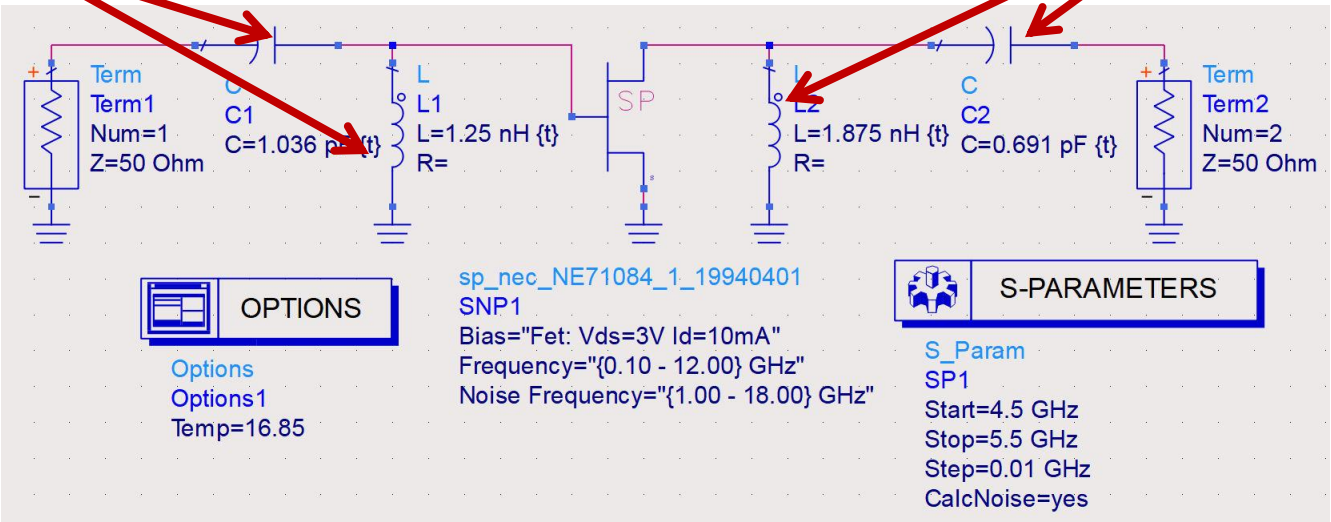

Step 13

- **tune** the components in the input/output matching networks for better results

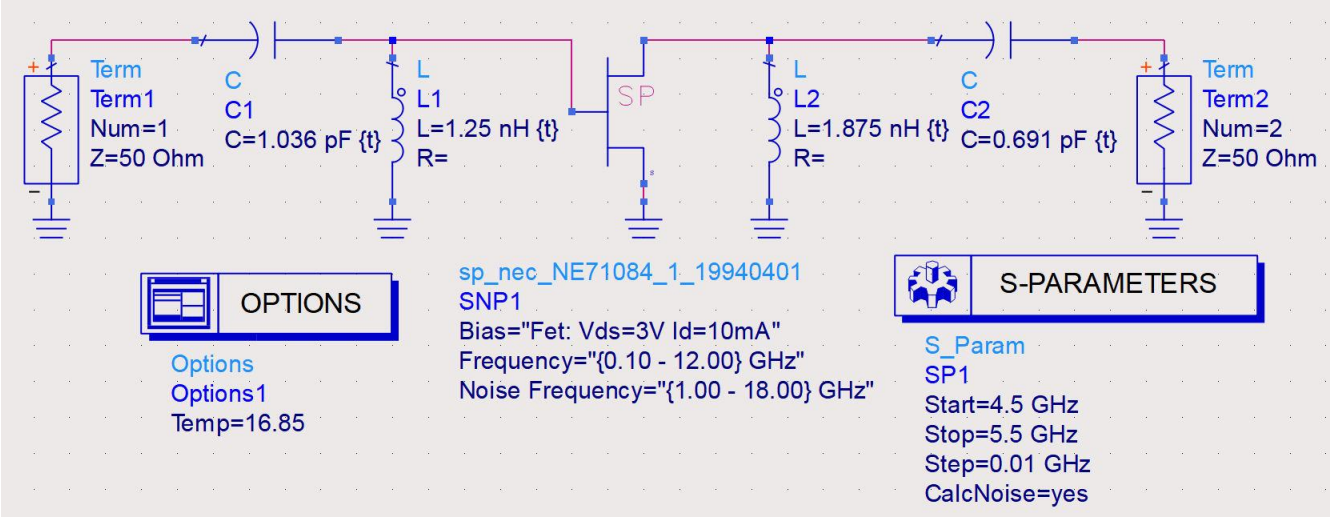

Final tune

- input components influence **both noise and gain**
  - they are first to tune, only these 2 while other components remain constant, checking the fulfillment of **noise** design target while sacrificing (accept worsening of) the **gain** (up to a point)

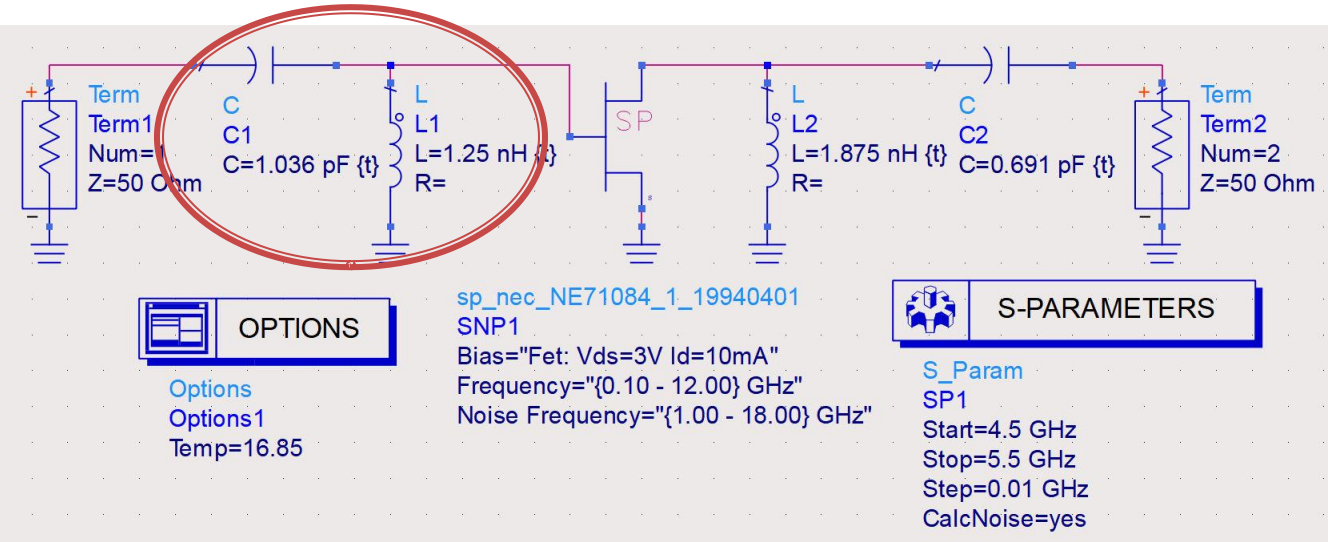

Final tune

- output components influence **only gain**
  - they are tuned next, only these 2 while other components remain constant, checking the fulfillment of **gain** design target, compensating its worsening during previous noise optimization

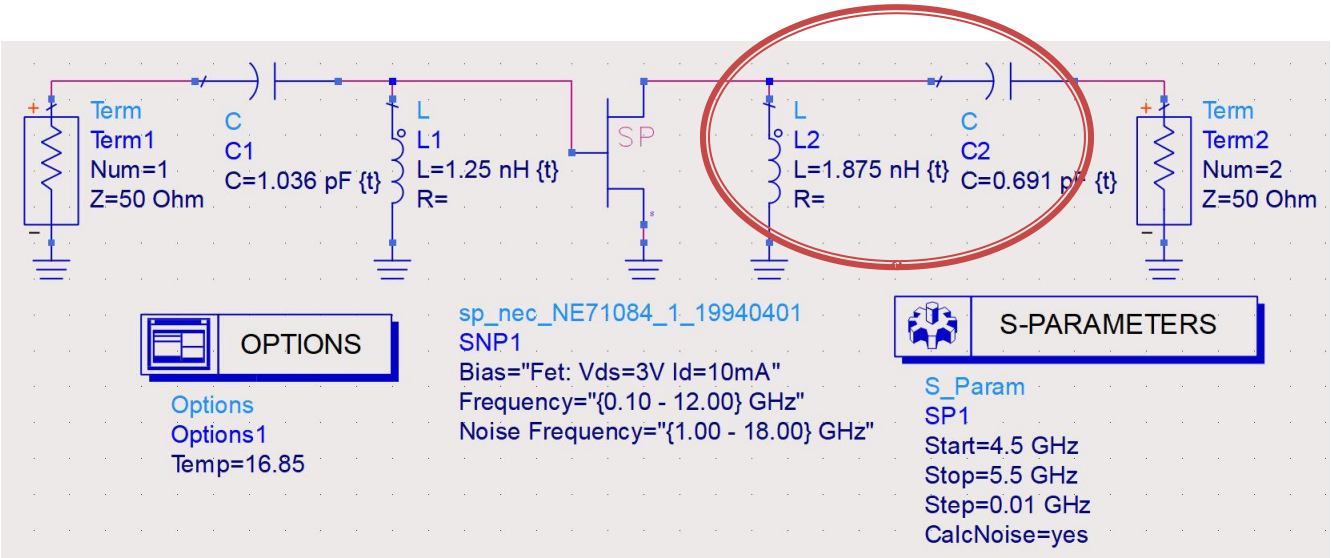

Final design

- We obtain (after tuning) the final values and check the fulfillment of the design goal:
  - Power gain – higher than the design goal, with a margin (0.5, 1, 2 dB), but we don't sacrifice the noise performance in order to increase it further
  - Band Pass behavior, around **fo**, is desirable (at least one of the L networks must be a HPF network)

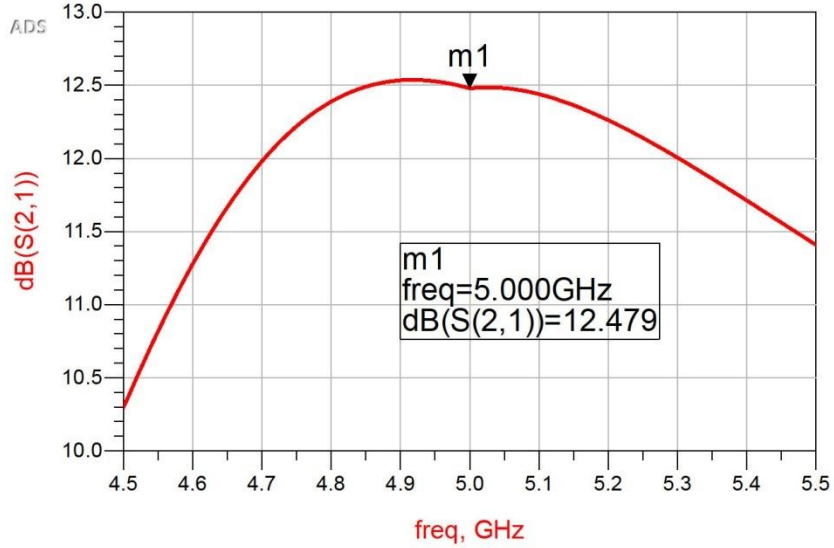

Final design

- We obtain (after tuning) the final values and check the fulfillment of the design data:
  - Noise factor – lower than the design goal, as low as possible, the lower the better

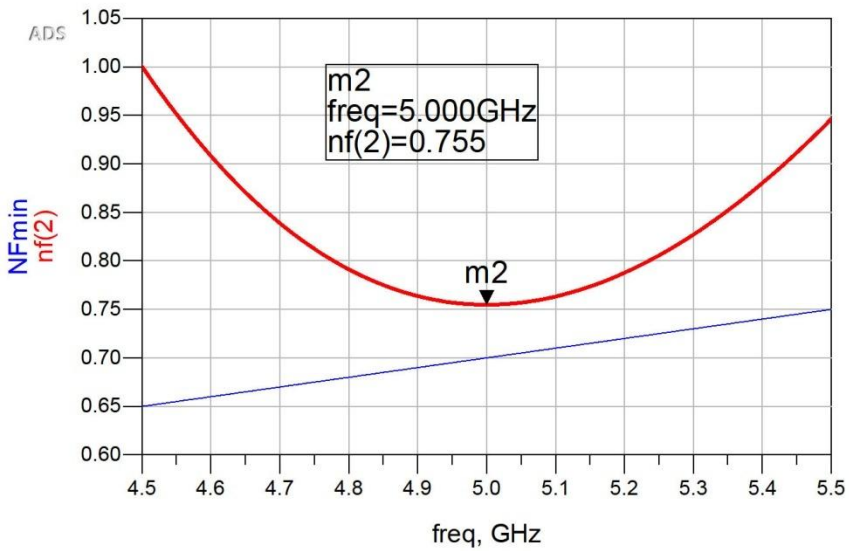

rf-opto

- Online exam, Laboratory 4
- You must upload to the server 4 files:
  - project zap file (**required**)
  - final schematic (sch4) – after final tune (image file: jpg/png, get it using "print screen")
  - result: gain – after final tune (image file: jpg/png, get it using "print screen")
  - result: noise – after final tune (image file: jpg/png, get it using "print screen")

Contact

- Laboratorul de microunde si optoelectronica
- http://rf-opto.etti.tuiasi.ro
- rdamian@etti.tuiasi.ro